ASCE STANDARD

ASCE/COPRI 61–14

Seismic Design of Piers and Wharves

This document uses both the International System of Units (SI) and customary units

ASCE

COPRI

COASTS, OCEANS, PORTS AND RIVERS INSTITUTE

American Society of Civil Engineers

Seismic Design of Piers and Wharves

This document uses both the International System of Units (SI) and customary units.

Published by the American Society of Civil Engineers

Library of Congress Cataloging-in-Publication Data

Seismic design of piers and wharves / American Society of Civil Engineers.
pages cm.
"ASCE/COPRI 61-14."
Includes bibliographical references and index.
ISBN 978-0-7844-1348-7 (print : alk. paper) – ISBN 978-0-7844-7834-9 (ebook)
1. Piers–Design and construction. 2. Piers–Earthquake effects. 3. Wharves–Design and construction. 4. Wharves–Earthquake effects. 5. Earthquake resistant design. I. American Society of Civil Engineers.
TC357.S45 2014
627'.31–dc23

2014008239

Published by American Society of Civil Engineers
1801 Alexander Bell Drive
Reston, Virginia 20191
www.asce.org/pubs

This standard was developed by a consensus standards development process which has been accredited by the American National Standards Institute (ANSI). Accreditation by ANSI, a voluntary accreditation body representing public and private sector standards development organizations in the United States and abroad, signifies that the standards development process used by ASCE has met the ANSI requirements for openness, balance, consensus, and due process.

While ASCE's process is designed to promote standards that reflect a fair and reasoned consensus among all interested participants, while preserving the public health, safety, and welfare that is paramount to its mission, it has not made an independent assessment of and does not warrant the accuracy, completeness, suitability, or utility of any information, apparatus, product, or process discussed herein. ASCE does not intend, nor should anyone interpret, ASCE's standards to replace the sound judgment of a competent professional, having knowledge and experience in the appropriate field(s) of practice, nor to substitute for the standard of care required of such professionals in interpreting and applying the contents of this standard.

ASCE has no authority to enforce compliance with its standards and does not undertake to certify products for compliance or to render any professional services to any person or entity.

ASCE disclaims any and all liability for any personal injury, property damage, financial loss, or other damages of any nature whatsoever, including without limitation any direct, indirect, special, exemplary, or consequential damages, resulting from any person's use of, or reliance on, this standard. Any individual who relies on this standard assumes full responsibility for such use.

ASCE and American Society of Civil Engineers—Registered in U.S. Patent and Trademark Office.

Photocopies and permissions. Permission to photocopy or reproduce material from ASCE publications can be requested by sending an e-mail to permissions@asce.org or by locating a title in ASCE's Civil Engineering Database (http://cedb.asce.org) or ASCE Library (http://ascelibrary.org) and using the "Permissions" link.

Errata: Errata, if any, can be found at http://dx.doi.org/10.1061/9780784413487.

Copyright © 2014 by the American Society of Civil Engineers.
All Rights Reserved.
ISBN 978-0-7844-1348-7 (paper)
ISBN 978-0-7844-7834-9 (PDF)
Manufactured in the United States of America.

21 20 19 18 17 16 15 14 1 2 3 4 5

STANDARDS

In 2006, the Board of Direction approved the revision to the ASCE Rules for Standards Committees to govern the writing and maintenance of standards developed by the Society. All such standards are developed by a consensus standards process managed by the Society's Codes and Standards Committee (CSC). The consensus process includes balloting by a balanced standards committee made up of Society members and nonmembers, balloting by the membership of the Society as a whole, and balloting by the public. All standards are updated or reaffirmed by the same process at intervals not exceeding five years.

The following standards have been issued:

ANSI/ASCE 1-82 N-725 Guideline for Design and Analysis of Nuclear Safety Related Earth Structures
ASCE/EWRI 2-06 Measurement of Oxygen Transfer in Clean Water
ANSI/ASCE 3-91 Standard for the Structural Design of Composite Slabs and ANSI/ASCE 9-91 Standard Practice for the Construction and Inspection of Composite Slabs
ASCE 4-98 Seismic Analysis of Safety-Related Nuclear Structures
Building Code Requirements for Masonry Structures (ACI 530-13/ASCE 5-13/TMS 402-13) and Specifications for Masonry Structures (ACI 530.1-13/ASCE 6-13/TMS 602-13)
ASCE/SEI 7-10 Minimum Design Loads for Buildings and Other Structures
SEI/ASCE 8-02 Standard Specification for the Design of Cold-Formed Stainless Steel Structural Members
ANSI/ASCE 9-91 listed with ASCE 3-91
ASCE 10-97 Design of Latticed Steel Transmission Structures
SEI/ASCE 11-99 Guideline for Structural Condition Assessment of Existing Buildings
ASCE/EWRI 12-13 Standard Guidelines for the Design of Urban Subsurface Drainage
ASCE/EWRI 13-13 Standard Guidelines for the Installation of Urban Subsurface Drainage
ASCE/EWRI 14-13 Standard Guidelines for the Operation and Maintenance of Urban Subsurface Drainage
ASCE 15-98 Standard Practice for Direct Design of Buried Precast Concrete Pipe Using Standard Installations (SIDD)
ASCE 16-95 Standard for Load Resistance Factor Design (LRFD) of Engineered Wood Construction
ASCE 17-96 Air-Supported Structures
ASCE 18-96 Standard Guidelines for In-Process Oxygen Transfer Testing
ASCE 19-10 Structural Applications of Steel Cables for Buildings
ASCE 20-96 Standard Guidelines for the Design and Installation of Pile Foundations
ANSI/ASCE/T&DI 21-13 Automated People Mover Standards
SEI/ASCE 23-97 Specification for Structural Steel Beams with Web Openings
ASCE/SEI 24-05 Flood Resistant Design and Construction
ASCE/SEI 25-06 Earthquake-Actuated Automatic Gas Shutoff Devices
ASCE 26-97 Standard Practice for Design of Buried Precast Concrete Box Sections
ASCE 27-00 Standard Practice for Direct Design of Precast Concrete Pipe for Jacking in Trenchless Construction
ASCE 28-00 Standard Practice for Direct Design of Precast Concrete Box Sections for Jacking in Trenchless Construction
ASCE/SEI/SFPE 29-05 Standard Calculation Methods for Structural Fire Protection
SEI/ASCE 30-14 Guideline for Condition Assessment of the Building Envelope
SEI/ASCE 31-03 Seismic Evaluation of Existing Buildings
SEI/ASCE 32-01 Design and Construction of Frost-Protected Shallow Foundations
EWRI/ASCE 33-09 Comprehensive Transboundary International Water Quality Management Agreement
EWRI/ASCE 34-01 Standard Guidelines for Artificial Recharge of Ground Water
EWRI/ASCE 35-01 Guidelines for Quality Assurance of Installed Fine-Pore Aeration Equipment
CI/ASCE 36-01 Standard Construction Guidelines for Microtunneling
SEI/ASCE 37-02 Design Loads on Structures during Construction
CI/ASCE 38-02 Standard Guideline for the Collection and Depiction of Existing Subsurface Utility Data
EWRI/ASCE 39-03 Standard Practice for the Design and Operation of Hail Suppression Projects
ASCE/EWRI 40-03 Regulated Riparian Model Water Code
ASCE/SEI 41-06 Seismic Rehabilitation of Existing Buildings
ASCE/EWRI 42-04 Standard Practice for the Design and Operation of Precipitation Enhancement Projects
ASCE/SEI 43-05 Seismic Design Criteria for Structures, Systems, and Components in Nuclear Facilities
ASCE/EWRI 44-05 Standard Practice for the Design and Operation of Supercooled Fog Dispersal Projects
ASCE/EWRI 45-05 Standard Guidelines for the Design of Urban Stormwater Systems
ASCE/EWRI 46-05 Standard Guidelines for the Installation of Urban Stormwater Systems
ASCE/EWRI 47-05 Standard Guidelines for the Operation and Maintenance of Urban Stormwater Systems
ASCE/SEI 48-11 Design of Steel Transmission Pole Structures
ASCE/SEI 49-12 Wind Tunnel Testing for Buildings and Other Structures
ASCE/EWRI 50-08 Standard Guideline for Fitting Saturated Hydraulic Conductivity Using Probability Density Functions
ASCE/EWRI 51-08 Standard Guideline for Calculating the Effective Saturated Hydraulic Conductivity
ASCE/SEI 52-10 Design of Fiberglass-Reinforced Plastic (FRP) Stacks
ASCE/G-I 53-10 Compaction Grouting Consensus Guide
ASCE/EWRI 54-10 Standard Guideline for Geostatistical Estimation and Block-Averaging of Homogeneous and Isotropic Saturated Hydraulic Conductivity
ASCE/SEI 55-10 Tensile Membrane Structures
ANSI/ASCE/EWRI 56-10 Guidelines for the Physical Security of Water Utilities
ANSI/ASCE/EWRI 57-10 Guidelines for the Physical Security of Wastewater/Stormwater Utilities
ASCE/T&DI/ICPI 58-10 Structural Design of Interlocking Concrete Pavement for Municipal Streets and Roadways
ASCE/SEI 59-11 Blast Protection of Buildings
ASCE/EWRI 60-12 Guidelines for Development of Effective Water Sharing Agreement
ASCE/COPRI 61-14 Seismic Design of Piers and Wharves

This page intentionally left blank

PREFACE

This is the first edition of this standard. This standard has been developed by a group of practicing structural engineers, geotechnical engineers, owners, and academics with specific expertise and experience in the marine and waterfront industries. It is intended to reflect the current practice of seismic design of piers and wharves, aspects of which differ considerably from conventional design of buildings or building-like structures. For example, load combinations for piers and wharves are unique and include berthing and mooring loads that may govern the lateral load design in low seismic regions. Geotechnical issues are a prime concern for these types of structures, with pile foundations often penetrating through weak soil layers. Liquefaction, lateral spreading, and ground failures affecting slopes and earth structures are all primary considerations for the analysis and design of piers and wharves. It is often not practical to eliminate these hazards; rather, structures are designed to accommodate permanent ground deformations within specified performance requirements.

This standard contains displacement-based design methods that have become widely used in the industry for more than a decade and have been supported by a number of industry-sponsored testing programs.

This standard is intended to benefit designers and owners by providing a method for considering the economic importance of a structure in addition to meeting life safety requirements. It is also intended to benefit building officials who do not routinely deal with waterfront structures.

Compliance with this standard should not be considered a guarantee that the desired performance goals will be achieved. Variation between the desired performance levels and actual performance should be expected because of the inherent uncertainties in prediction of seismic ground motion, liquefaction, and other seismic effects and because of the inherent uncertainties in levels of workmanship, material strengths, levels of maintenance, structure condition, and other effects.

This standard has been prepared in accordance with recognized engineering principles and should not be used without the user's competent knowledge for a given application. The publication of this standard by ASCE is not intended to warrant that the information contained herein is suitable for any general or specific use, and ASCE takes no position respecting the validity of patent rights. The user is advised that the determination of patent rights or risk of infringement is entirely his or her own responsibility.

This page intentionally left blank

STANDARDS COMMITTEE ON SEISMIC DESIGN OF PIERS AND WHARVES

Voting Members

Gayle S. Johnson, P.E., M.ASCE, *Chair*
Arul K. Arulmoli, P.E., D.GE, F.ASCE
Somvith Asavareungchai, P.E., M.ASCE
Scott A. Ashford, P.E., M.ASCE
Carlos A. Blandon, Ph.D., C.Eng, M.ASCE
William M. Camp III, P.E., D.GE, M.ASCE
Domenic D'Argenzio, P.E., M.ASCE
John C. Daley, P.E., M.ASCE
Stephen E. Dickenson, Ph.D., P.E., D.PE, M.ASCE
Martin L. Eskijian, P.E., D.PE, M.ASCE
Robert E. Harn, P.E., M.ASCE
Said I. Hilmy, Ph.D., P.E., M.ASCE
Charles S. Hughes
Kerop D. Janoyan, Ph.D., P.E., M.ASCE
Omar A. Jaradat, Ph.D., P.E., D.PE, M.ASCE
Kosal Krishnan, Ph.D., P.E., M.ASCE
Cheng C. Lai, P.E., S.E., M.ASCE
Douglas D. Lindquist, P.E., M.ASCE
Barry A. Mac Donnell, P.E., A.M.ASCE
Timothy W. Mays, Ph.D., P.E.
Nason J. McCullough, Ph.D., P.E., M.ASCE
Constantine D. Memos, Ph.D., P.E., F.ASCE
Alex I. Mora, P.E., M.ASCE
Kevin B. O'Malley, P.E., M.ASCE
Kendra C. Oliver, P.E., M.ASCE
Dimitris Pachakis, P.E., C.Eng, M.ASCE
Dan Raynor
Jose I. Restrepo, Ph.D., M.ASCE
Farhad Rowshanzamir, P.E., P.Eng, S.E., M.ASCE
Raymond E. Sandiford, P.E., F.ASCE
J. Paul Smith-Pardo, Ph.D., P.E., M.ASCE
Erik G. Soderberg, P.E., M.ASCE
Eric K. Thorkildsen, P.E., M.ASCE
Ted W. Trenkwalder, P.E., S.E., M.ASCE
Donald J. Tylenda, Aff.M.ASCE
Max Weismair
Xiping Steven Wu, Ph.D., A.M.ASCE
Zia Zafir, P.E., M.ASCE

Associate Members

Rod K. Iwashita, P.E., M.ASCE
Nathan A. Lemme, P.E.
Angel Lim, S.E., M.ASCE.
Carlos E. Ospina, Ph.D., P.E., M.ASCE
Patrick M. Smith, Ph.D., P.E., M.ASCE

This page intentionally left blank

ACKNOWLEDGMENTS

The Committee would like to acknowledge the financial support of the NAVFAC Waterfront IPT (Integrated Product Team) in the preparation of this standard. They provided funding for independent technical reviews of the document content at an early stage of the standard development, and later donated staff time to perform the technical editing for the entire document and to ensure conformance with ASCE writing standards. In particular, the Committee would like to thank Nate Lemme, P.E., of NAVFAC for his time and effort in creation of this first edition of the standard.

This page intentionally left blank

CONTENTS

STANDARDS . . . iii

PREFACE . . . v

1 General . . . 1
- 1.1 Introduction. . . . 1
- 1.2 Definitions . . . 1
- 1.3 Document layout . . . 1
- 1.4 Units . . . 1

2 Seismic Performance Requirements . . . 3
- 2.1 Introduction. . . . 3
- 2.2 Design classifications . . . 3
- 2.3 Design criteria . . . 3
- 2.4 Performance levels . . . 3
- 2.5 Seismic hazards to be considered . . . 3
- 2.6 References . . . 3

3 Design Approach . . . 5
- 3.1 Introduction. . . . 5
- 3.2 Definitions . . . 5
- 3.3 Symbols and notation . . . 5
- 3.4 Overall approach and organization of this standard . . . 5
- 3.5 Determination of analysis and design method . . . 6
- 3.6 Load combinations . . . 6
- 3.7 General modeling considerations . . . 6
- 3.8 Other design considerations . . . 7
- 3.9 Strain limits. . . . 7
- 3.10 Design earthquake stability check . . . 7
- 3.11 Batter piles . . . 8
- 3.12 Seismic isolation systems . . . 8
- 3.13 References . . . 8

4 Geotechnical Considerations and Soil–Structure Interaction . . . 9
- 4.1 Introduction. . . . 9
- 4.2 Definitions . . . 9
- 4.3 Earthquake ground motions . . . 9
- 4.4 Liquefaction and cyclic degradation potential . . . 9
- 4.5 Slope stability and lateral ground deformation . . . 9
- 4.6 Fault rupture . . . 10
- 4.7 Lateral loadings for soil–structure interaction . . . 10
- 4.8 Soil–pile behavior under lateral loading . . . 10
- 4.9 Seismically induced settlement . . . 10
- 4.10 Axial pile performance . . . 10
- 4.11 Earth pressures . . . 10
- 4.12 References . . . 10

5 Force-Based Design . . . 11
- 5.1 Introduction. . . . 11
- 5.2 Definitions . . . 11
- 5.3 Symbols and notation . . . 11
- 5.4 Force-based demand analysis . . . 11
- 5.5 Modeling . . . 12

5.6 Force-based capacity analysis . . . 12
5.7 References . . . 13

6 Displacement-Based Design . . . 15
6.1 General . . . 15
6.2 Definitions . . . 15
6.3 Symbols and definitions . . . 15
6.4 Overview of seismic design approach . . . 16
6.5 Inelastic material properties . . . 16
6.6 Modeling . . . 18
6.7 Capacity analysis . . . 19
6.8 Demand analysis . . . 19
6.9 Demand loads on protected elements . . . 21
6.10 References . . . 23

7 Design and Detailing Considerations . . . 25
7.1 Introduction . . . 25
7.2 Definitions . . . 25
7.3 Symbols and notation . . . 25
7.4 Pile-to-deck connections . . . 26
7.5 Piles . . . 28
7.6 Joint shear . . . 28
7.7 Joint detailing . . . 29
7.8 Decks . . . 31
7.9 Constructability . . . 31
7.10 References . . . 31

8 Ancillary Components . . . 33
8.1 Introduction . . . 33
8.2 Definitions . . . 33
8.3 Symbols and notation . . . 33
8.4 General design requirements . . . 33
8.5 Component-specific design requirements . . . 33
8.6 References . . . 34

C1 General . . . 35
C1.1 Introduction . . . 35
C1.2 Definitions . . . 35
C1.5 References . . . 36

C2 Seismic Performance Requirements . . . 37
C2.1 Introduction . . . 37
C2.2 Design classifications . . . 37
C2.3 Design criteria . . . 37
C2.4 Performance levels . . . 38
C2.5 Seismic hazards to be considered . . . 39
C2.6 References . . . 39

C3 Design Approach . . . 41
C3.4 Overall approach and organization of this standard . . . 41
C3.5 Determination of analysis and design method . . . 41
C3.7 General modeling considerations . . . 41
C3.9 Strain limits . . . 41
C3.10 Design earthquake stability check . . . 41
C3.11 Batter piles . . . 41
C3.13 References . . . 42

C4 Geotechnical Considerations and Soil–Structure Interaction . . . 43
C4.1 Introduction . . . 43
C4.3 Earthquake ground motions . . . 43

C4.4 Liquefaction and cyclic degradation potential . . . 44
C4.5 Slope stability and lateral ground deformation . . . 44
C4.6 Fault rupture . . . 45
C4.7 Lateral loadings for soil–structure interaction . . . 45
C4.8 Soil–pile behavior under lateral loading . . . 46
C4.9 Seismically induced settlement . . . 47
C4.10 Axial pile performance . . . 47
C4.11 Earth pressures . . . 48
C4.12 References . . . 48

C5 Force-Based Design . . . 51
C5.1 Introduction. . . . 51
C5.4 Force-based demand analysis . . . 51
C5.5 Modeling . . . 51
C5.6 Force-based capacity analysis . . . 51
C5.7 References . . . 52

C6 Displacement-Based Design . . . 53
C6.1 General . . . 53
C6.4 Overview of seismic design approach . . . 53
C6.5 Inelastic material properties . . . 53
C6.6 Modeling . . . 53
C6.7 Capacity analysis . . . 54
C6.8 Demand analysis . . . 56
C6.9 Demand loads on protected elements . . . 56
C6.10 References . . . 56

C7 Design and Detailing Considerations . . . 59
C7.1 Introduction. . . . 59
C7.2 Definitions . . . 59
C7.4 Pile-to-deck connections . . . 59
C7.5 Piles. . . . 64
C7.6 Joint shear . . . 64
C7.7 Joint detailing . . . 64
C7.8 Decks . . . 67
C7.9 Constructability. . . . 67
C7.10 References . . . 68

C8 Ancillary Components . . . 71
C8.1 Introduction. . . . 71
C8.4 General design requirements . . . 71
C8.5 Component-specific design requirements . . . 71
C8.6 References . . . 73

INDEX . . . 75

This page intentionally left blank

CHAPTER 1
GENERAL

1.1 INTRODUCTION

1.1.1 Purpose The purpose of this standard is to provide minimum requirements for the seismic design of pile-supported piers and wharves.

1.1.2 Scope and Limitations This standard addresses the seismic design of new piers and wharves supported on concrete or steel piles.

This standard does not address the following:

- Structures that are subject to different operational or special regulatory requirements such as offshore platforms or liquefied natural gas (LNG) terminals, or
- Piers or wharves that are accessible to the general public.

This standard does not address all of the aspects of design of sheet pile walls, cellular walls, or similar structures that may be components of a pile-supported pier or wharf.

This standard is intended for use by qualified geotechnical and structural engineers with experience in the marine industry and officials engaged in preparing and administering local codes. This standard is not intended to replace sound engineering knowledge, experience, and judgment.

1.2 DEFINITIONS

The following definitions apply to the provisions of Chapter 1:

PIERS: In this standard, piers are pile-supported platform structures that extend outward perpendicular, or almost perpendicular, from the shore into a body of water and allow water to flow underneath.

WHARVES: In this standard, wharves are pile-supported platform structures that are constructed parallel or almost parallel to the shore.

1.3 DOCUMENT LAYOUT

Chapter 1 presents the purpose, scope, limitations, and layout of this standard. Chapter 2 defines seismic design classifications, performance requirements, and seismic hazard levels. Chapter 3 provides the required steps and criteria for performing a seismic design of a pier or wharf. Chapter 4 introduces the geotechnical considerations required for a seismic design. Chapter 5 presents criteria for force-based design, and Chapter 6 presents those for displacement-based design. Chapter 7 provides provisions for design and detailing. Chapter 8 deals with design considerations for ancillary and nonstructural components. A commentary is provided for each chapter.

1.4 UNITS

Both English and SI units are presented in this document unless noted otherwise.

This page intentionally left blank

CHAPTER 2
SEISMIC PERFORMANCE REQUIREMENTS

2.1 INTRODUCTION

2.1.1 Scope This chapter defines design classifications, performance requirements, and seismic hazard levels.

2.2 DESIGN CLASSIFICATIONS

Structures designed in accordance with this standard shall be assigned, by the authority having jurisdiction, one of the design classifications presented in Sections 2.2.1 through 2.2.3. An owner is permitted to assign a structure a more severe design classification.

2.2.1 High Structures shall be assigned a design classification of "high" if they are essential to the region's economy or post-event recovery and they require a level of seismic performance beyond life safety protection.

2.2.2 Moderate Structures shall be assigned a design classification of "moderate" if they are of secondary importance to the regional economy and not essential to post-event recovery but they require a level of seismic performance beyond life safety protection.

2.2.3 Low Structures not assigned a design classification of "high" or "moderate" shall be assigned a design classification of "low."

2.3 DESIGN CRITERIA

Minimum design criteria for structures in each design classification are shown in Table 2-1.

2.4 PERFORMANCE LEVELS

The required structural response for each performance level considered in this standard is presented in Sections 2.4.1 through 2.4.3.

2.4.1 Life Safety Protection A structure shall be classified as providing "life safety protection" when (a) the post-earthquake damage state is such that the structure continues to support gravity loads, (b) damage that does occur does not prevent egress, and (c) there is no loss of containment of materials in a manner that would pose a public hazard.

2.4.2 Controlled and Repairable Damage A structure shall be classified as having achieved "controlled and repairable damage" when (a) the structure responds in a controlled and ductile manner, experiencing limited inelastic deformations at locations where repair is possible; (b) the required repairs result in a loss of serviceability for no more than several months; and (c) there is no loss of containment of materials in a manner that would pose a public hazard.

2.4.3 Minimal Damage A structure shall be classified as having achieved "minimal damage" when (a) it exhibits near-elastic structural response with minor or no residual deformation, (b) there is no loss of serviceability of the structure, and (c) there is no loss of containment of materials in a manner that would pose a public hazard.

2.5 SEISMIC HAZARDS TO BE CONSIDERED

In addition to inertial loads caused by ground shaking, the potential for and extent of other seismic hazards that could occur at pier and wharf sites, including ground deformations associated with liquefaction and cyclic degradation of weak soils, shall be evaluated for each of the aboveground motion levels applicable in accordance with Table 2-1. Kinematic loading caused by ground deformations adjacent to piles and effects of fault rupture shall be considered in accordance with Chapter 4.

2.6 REFERENCES

American Society of Civil Engineers (ASCE). (2005). *Minimum design loads for buildings and other structures*, ASCE 7-05, American Society of Civil Engineers, Reston, VA.

Table 2-1. Minimum Seismic Hazard and Performance Requirements

	Seismic hazard level and performance level					
	Operating level earthquake (OLE)		Contingency level earthquake (CLE)		Design earthquake (DE)	
	Ground motion probability of exceedance	Performance level	Ground motion probability of exceedance	Performance level	Seismic hazard level	Performance level
High	50% in 50 years (72-year return period)	Minimal damage	10% in 50 years (475-year return period)	Controlled and repairable damage	Design earthquake per ASCE 7 (2005)	Life safety protection
Moderate	N/A	N/A	20% in 50 years (224-year return period)	Controlled and repairable damage	Design earthquake per ASCE 7 (2005)	Life safety protection
Low	N/A	N/A	N/A	N/A	Design earthquake per ASCE 7 (2005)	Life safety protection

This page intentionally left blank

CHAPTER 3
DESIGN APPROACH

3.1 INTRODUCTION

3.1.1 Scope This chapter defines the steps required for the seismic design of pier and wharf structures.

3.2 DEFINITIONS

The following definitions apply to the provisions of Chapter 3:

CONTAINER WHARVES: Structures located in waterfront areas used for berthing and mooring of ships and for the transfer of containers from the ship to the land by means of movable cranes supported on a wharf structure.

DISPLACEMENT-BASED DESIGN: A design approach whereby an anticipated displacement of the structure is determined for design earthquake motions and the various elements are designed to perform to certain standards under the imposed displacements.

DYNAMIC MAGNIFICATION FACTOR (DMF): A factor to account for torsional response and simultaneous longitudinal and transverse excitations.

FORCE-BASED DESIGN: A design approach whereby structures and all components along the load path of the structure are designed to withstand prescribed design loads while remaining within prescribed stress limits.

STRAIN PENETRATION: The inelastic strain that occurs in the dowel on each side of the interface and provides additional flexibility at the connection.

SUBSTITUTE STRUCTURE METHOD: A nonlinear static demand analysis methodology that employs an iterative process using design spectra with effective secant stiffness at the response displacement to determine the displacement demand for each iteration.

3.3 SYMBOLS AND NOTATION

The following symbols and notation apply only to the provisions of Chapter 3:

A_c	Area of concrete test core as defined in ACI 318 (2008)
D	Dead loads, including all permanent fixed equipment and structures
D_p	Pile diameter
e	Eccentricity between center of mass and center of rigidity
E	Horizontal earthquake load
E_c	Modulus of elasticity of concrete
E_{h1}	Earthquake load in one primary orthogonal direction
E_{h2}	Earthquake load in second primary orthogonal direction
f'_{ce}	Expected strength of unconfined concrete
G_c	Modulus of rigidity of concrete
H	Soil pressure loads (e.g., soil pressure on end walls, concrete cutoff walls, and steel sheet pile walls on pier or wharf type structures and/or piles)
I	Moment of inertia
I_{eff}	Effective moment of inertia
J	Polar moment of inertia
J_{eff}	Effective polar moment of inertia
L	Uniform live loads
L_l	Length of pier or wharf segment
PGA	Peak ground acceleration
R	Response modification factor
S_{DS}	Design, 5% damped, spectral response acceleration parameter at short periods (taken as 0.2 s)
β_1	Factor relating depth of equivalent rectangular compressive stress block to neutral axis depth as defined in ACI 318 (2008)
Δ_d	Total displacement demand
Δ_t	Transverse displacement demand
ε_c	Extreme concrete fiber compressive strain
ε_p	Strain in prestressing tendons
ε_s	Strain in steel pipe pile (tension or compression)
ε_{smd}	Strain at peak stress of dowel reinforcement
ρ_s	Volumetric ratio of confining steel
ϕ	Capacity reduction factor per ACI 318 (2008)

3.4 OVERALL APPROACH AND ORGANIZATION OF THIS STANDARD

The list following identifies tasks that are necessary to satisfy the seismic design requirements of this standard and the location in the book of the requirements applicable to those tasks. Note that the steps listed are limited to those required for seismic design, assuming that the structure has already been designed for static and nonseismic lateral service loads before design for seismic loads.

1. Definition of the design classification in Section 2.2.
2. Based on the design classification, determination of which performance levels need to be satisfied per Table 2-1, along with associated hazard levels.
3. Determination of the design method (displacement-based and/or force-based) in Section 3.5.
4. Definition of ground motions in Section 4.3.
5. Determination of soil–structure modeling parameters (*p-y* and *t-z* springs) in Sections 4.8 and 4.10.
6. Determination of other special geotechnical considerations or loads in Chapter 4.
7. Development of the structural model, including general modeling considerations of Section 3.7.

8. Calculation of structural demands in Section 3.6 and either Section 5.4 for force-based design methods or Section 6.8 for displacement-based design methods.
9. Calculation of structural capacity in either Chapter 5 for force-based design methods or Chapter 6 for displacement-based design methods.
10. Development of design connection details in Chapter 7.
11. Design of ancillary components in Chapter 8.

Alternate approaches based on sound engineering principles, testing, or other bases are permitted if determined to be acceptable by the authority having jurisdiction.

3.5 DETERMINATION OF ANALYSIS AND DESIGN METHOD

Displacement-based and force-based design methods are permitted by this standard. Analysis and design provisions for force-based design and displacement-based design are provided in Chapters 5 and 6, respectively. Detailing requirements are provided in Chapter 7.

The following list summarizes requirements for selection of the design method:

a. Displacement-based design is permitted for all design classifications.
b. Force-based design is permitted for "low" design classifications.
c. Force-based design is permitted for all design classifications when $S_{DS} < 0.33$ (per Section 11.4 of ASCE 7 [2005]).
d. Force-based design is permitted for all design classifications where it can be demonstrated that the capacity of all primary structural members exceeds the elastic earthquake demand force when using a value of $R = 1$.
e. Force-based design is permitted for the design of equipment and piping supports.

3.6 LOAD COMBINATIONS

3.6.1 Load Combinations Including Seismic Each component of the structure shall be analyzed for the load combination of Eq. (3-1) (load and resistance factor design [LRFD]). Seismic loads need not be combined with mooring and berthing loads, or environmental loads such as wind, wave, and current.

$$(1.0 \pm 0.5\,\text{PGA})D + 0.1L + 1.0H + 1.0E \qquad (3\text{-}1)$$

where D = dead loads, including all permanent fixed equipment and structures, and other items expected to be present for more than 50% of the time;
L = uniform live loads;
H = soil pressure loads (e.g., soil pressure on end walls, concrete cutoff walls, steel sheet pile walls on pier or wharf type structures, and/or piles);
E = horizontal earthquake loads as defined in Section 3.6.2; and
PGA = peak ground acceleration.

Exception: The load factor on H shall be set equal to zero if the structural action caused by H counteracts that caused by E. Where lateral earth pressure provides resistance to structural actions from other nonseismic forces, it shall not be included in H but shall be included in the design resistance.

Vertical earthquake loads are accounted for with the multiplier of 0.5 PGA in Eq. (3-1). Loads shall be applied in the direction that results in the most conservative response.

3.6.2 Orthogonal Loading and Torsional Effects Effects of simultaneous seismic excitation in orthogonal horizontal directions shall be considered by using both Eqs. (3-2) and (3-3). Directions shall be combined to produce the largest demand on the structure.

$$E = \pm 1.0E_{h1} \pm 0.3E_{h2} \qquad (3\text{-}2)$$

$$E = \pm 0.3E_{h1} \pm 1.0E_{h2} \qquad (3\text{-}3)$$

where E_{h1} and E_{h2} are the earthquake actions in the principal horizontal directions.

Torsional effects shall be considered where there is a significant eccentricity between the center of gravity and the center of rigidity.

In lieu of Eqs. (3-2) and (3-3), it is permitted to address both orthogonal and torsional loads using a dynamic magnification factor (DMF). For piers and wharves with an aspect ratio (length to width) greater than 3, it is permitted to use Eq. (3-4):

$$\Delta_d = \Delta_t \sqrt{1 + (0.3(1 + 20e/L_l))^2} \qquad (3\text{-}4)$$

where Δ_d = total displacement demand;
Δ_t = transverse displacement demand;
e = eccentricity between center of mass and center of rigidity; and
L_l = length of pier or wharf segment.

3.7 GENERAL MODELING CONSIDERATIONS

3.7.1 General The analytical model shall incorporate all significant components of the lateral-force-resisting system for the purpose of determining member forces and structure displacements resulting from the applied loads and any imposed displacements or P-delta effects, where required. The model shall include the stiffness and strength characteristics of elements that are significant to the distribution of forces and deformations in the structure and represent the spatial distribution of mass and stiffness throughout the structure. At a minimum, the model shall include the deck, the pile-to-deck connection, and the piles.

The following shall be considered in the analysis:

a. Uncertainties in soil properties (incorporated into the analysis in accordance with Section 4.8.2);
b. Torsional effects caused by differences in plan location of the center of mass (CM) and center of rigidity (CR);
c. Cracked section properties; and
d. Mass of ancillary components (in accordance with Chapter 8).

3.7.2 Section Properties Section properties, flexural rigidity E_cI, and torsional rigidity G_cJ, shall reflect the cracking that occurs before the yield limit state is reached. The effective moments of inertia, I_{eff} and J_{eff} shall be used to obtain realistic values for the structure's elastic period and seismic demands.

The effective moment of inertia, I_{eff}, shall be used for the structural model. I_{eff} shall be estimated by the secant slope of the moment–curvature curve between the origin and the point of first yield, as defined in Section 6.6.2.

3.7.3 Seismic Mass The mass considered for the dynamic analysis shall include the structural self-weight of the entire pier or wharf, permanently attached equipment, and 10% of the design uniform live load. Hydrodynamic mass associated with piles, where significant, shall be considered. For 24-in. (0.610-m) diameter piles or less, hydrodynamic mass may be ignored. The mass of container cranes shall be determined in accordance with Section 8.5.2 and distributed over the length of the wharf.

For pile-supported piers, wharves, and platforms where containers are stacked on the structure, the effects of the stacked containers on the seismic mass of the structure shall be considered.

3.8 OTHER DESIGN CONSIDERATIONS

3.8.1 Capacity Protection The deck shall be designed as a capacity-protected element, such that all inelastic deformations occur in piles rather than in the deck elements. Yielding of the pile-to-deck connection is permitted.

Exception: Strain penetration of the pile connection dowels in the deck is permitted.

3.9 STRAIN LIMITS

The maximum plastic hinge zone strains for the operating level earthquake (OLE), contingency level earthquake (CLE), and design earthquake (DE) performance levels (as defined in Table 2-1) shall be calculated per Section 6.6.3 using the moment–curvature methods described in conjunction with the plastic hinge lengths provided in Table 6-1and compared to the strain limits provided in this section.

3.9.1 OLE Strain Limits Table 3-1 provides the maximum material strains allowed within the performance level of "minimal damage" as per Section 2.4.3.

3.9.2 CLE Strain Limits Table 3-2 provides the maximum material strains within the performance level of "controlled and repairable damage" as per Section 2.4.2.

3.9.3 DE Strain Limits Table 3-3 provides the maximum material strains allowed within the performance level of "life safety protection" as per Section 2.4.1.

Concrete piles are also subject to the DE stability check in Section 3.10. Steel piles are subject to the DE stability check in Section 3.10.

Pile connections at the top of a pile may have additional requirements and limitations depending on the type of connection, as per Chapter 7.

Table 3-1. Strain Limits for "Minimal Damage" per Section 2.4.3

		Hinge location		
Pile type	Component	Top of pile	In ground	Deep in ground (>10D_p)
Solid concrete pile	Concrete	$\varepsilon_c \le 0.005$	$\varepsilon_c \le 0.005$	$\varepsilon_c \le 0.008$
	Reinforcing steel	$\varepsilon_s \le 0.015$		
	Prestressing steel		$\varepsilon_p \le 0.015$	$\varepsilon_p \le 0.015$
Hollow concrete pile[a]	Concrete	$\varepsilon_c \le 0.004$	$\varepsilon_c \le 0.004$	$\varepsilon_c \le 0.004$
	Reinforcing steel	$\varepsilon_s \le 0.015$		
	Prestressing steel		$\varepsilon_p \le 0.015$	$\varepsilon_p \le 0.015$
Steel pipe pile	Steel pipe		$\varepsilon_s \le 0.010$	$\varepsilon_s \le 0.010$
	Concrete	$\varepsilon_c \le 0.010$		
	Reinforcing steel	$\varepsilon_s \le 0.015$		

[a]If the interior of the hollow pile is filled with concrete, all strain limits shall be the same as for solid piles.

3.10 DESIGN EARTHQUAKE STABILITY CHECK

The DE stability check shall be performed per Section 6.6.7, with the following modifications. All pile-to-deck connections with a reinforcement strain greater than 0.06 shall be assumed to be pinned at the top for the DE stability check. In addition, the strain limits in Table 3-3 shall not be exceeded.

Table 3-2. Strain Limits for "Controlled and Repairable Damage" per Section 2.4.2

		Hinge location		
Pile type	Component	Top of pile	In ground	Deep in ground (>10D_p)
Solid concrete pile	Concrete	$\varepsilon_c \le 0.005 + 1.1\rho_s \le 0.025$	$\varepsilon_c \le 0.005 + 1.1\rho_s \le 0.008$	$\varepsilon_c \le 0.012$
	Reinforcing steel	$\varepsilon_s \le 0.6\varepsilon_{smd} \le 0.06$		
	Prestressing steel		$\varepsilon_p \le 0.025$	$\varepsilon_p \le 0.025$
Hollow concrete pile[a]	Concrete	$\varepsilon_c \le 0.006$	$\varepsilon_c \le 0.006$	$\varepsilon_c \le 0.006$
	Reinforcing steel	$\varepsilon_s \le 0.4\varepsilon_{smd} \le 0.04$		
	Prestressing steel		$\varepsilon_p \le 0.020$	$\varepsilon_p \le 0.025$
Steel pipe pile	Steel pipe		$\varepsilon_s \le 0.025$[b]	$\varepsilon_s \le 0.035$
	Concrete	$\varepsilon_c \le 0.025$		
	Reinforcing steel	$\varepsilon_s \le 0.6\varepsilon_{smd} \le 0.06$		

[a]If the interior of the hollow pile is filled with concrete, all strain limits shall be the same as for solid piles.
[b]If the steel pipe pile is infilled with concrete, a value of 0.035 may be used.

Table 3-3. Strain Limits for "Life Safety Protection" per Section 2.4.1

		Hinge location		
Pile type	Component	Top of pile	In ground	Deep in ground (>10D_p)
Solid concrete pile	Concrete	No limit	$\varepsilon_c \le 0.005 + 1.1\rho_s \le 0.012$	No limit
	Reinforcing steel	$\varepsilon_s \le 0.8\varepsilon_{smd} \le 0.08$		
	Prestressing steel		$\varepsilon_p \le 0.035$	$\varepsilon_p \le 0.050$
Hollow concrete pile[a]	Concrete	$\varepsilon_c \le 0.008$	$\varepsilon_c \le 0.008$	$\varepsilon_c \le 0.008$
	Reinforcing steel	$\varepsilon_s \le 0.6\varepsilon_{smd} \le 0.06$		
	Prestressing steel		$\varepsilon_p \le 0.025$	$\varepsilon_p \le 0.050$
Steel pipe pile	Steel pipe		$\varepsilon_s \le 0.035$[b]	$\varepsilon_s \le 0.050$
	Concrete	No limit		
	Reinforcing steel	$\varepsilon_s \le 0.8\varepsilon_{smd} \le 0.08$		

[a]If the interior of the hollow pile is filled with concrete, all strain limits shall be the same as for solid piles.
[b]If the steel pipe pile is infilled with concrete, a value of 0.050 may be used.

3.11 BATTER PILES

The use of batter piles is permitted provided that the structure satisfies all force, displacement, and compatibility requirements caused by seismic loading. In addition, the following restrictions apply:

a. Yielding of the tension batter pile to deck connection is permitted in the CLE and DE provided the hysteretic performance of the connection is considered. If sleeved dowels are used as a fusing mechanism for either solid concrete piles or steel pipe piles with a plug connection, the permitted elongation in the dowels shall be calculated by multiplying the sleeve length times 50% of the strain limits in Section 3.9.
b. The use of pile slip as a yielding mechanism for the compression pile is prohibited in the OLE.
c. Pile slip in the CLE and DE is permitted as a fusing mechanism provided that the lower-bound geotechnical capacity is used to calculate displacement demand and the upper-bound geotechnical capacity is used to calculate force demand. The effects of permanent deck displacement caused by pile slip shall be considered.
d. The deck shall be capacity protected and designed to resist 1.25 times the DE displacements associated with the lower-bound geotechnical capacity of the piles and 1.25 times the DE forces associated with the upper-bound geotechnical capacity of the piles.
e. The use of pile buckling as a yielding mechanism for the compression pile is prohibited.

3.12 SEISMIC ISOLATION SYSTEMS

The use of seismic isolation systems is permitted provided that the isolation mechanism is suitable for use in a marine environment. The isolation mechanism shall meet the testing requirements of Section 17.8 of ASCE 7 (2005) and the following requirements:

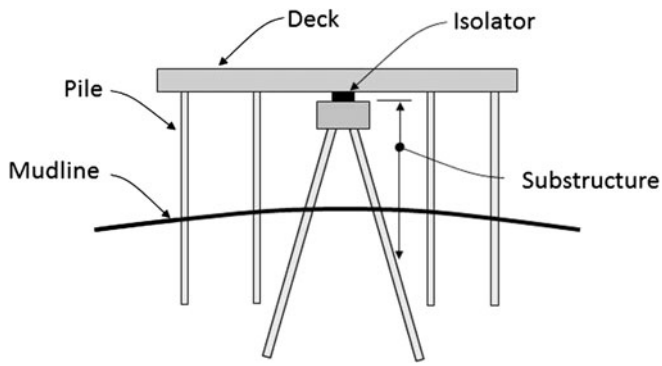

Fig. 3-1. Example of a pier with seismic isolation

3.12.1 Capacity Protection of Deck and Substructure The deck and substructure as shown in Fig. 3-1 shall be designed as capacity-protected elements using the calculated peak shear demand from the isolator(s) multiplied by 1.3 in the DE.

3.12.2 Effective System Damping The effective system damping of the structure shall be calculated based on the energy dissipated by the different structural elements. The effective damping of the substructure shall be taken as 5%.

3.12.3 Analysis Methods The substitute structure and the response spectrum methods of analysis are permitted provided that the total effective damping does not exceed 30%. If the total effective damping exceeds 30%, a nonlinear time history analysis is required.

3.13 REFERENCES

American Concrete Institute (ACI). (2008). *Building code requirements for structural concrete* (ACI 318-08) and commentary (ACI 318R-08), American Concrete Institute, Farmington Hills, MI.

American Society of Civil Engineers (ASCE). (2005). *Minimum design loads for buildings and other structures*, ASCE 7-05, American Society of Civil Engineers, Reston, VA.

CHAPTER 4
GEOTECHNICAL CONSIDERATIONS AND SOIL–STRUCTURE INTERACTION

4.1 INTRODUCTION

4.1.1 Scope This chapter describes the minimum requirements for evaluations of ground motions corresponding to the seismic hazard levels identified in Table 2-1, geotechnical hazards associated with these ground motions, and soil–structure interaction.

4.2 DEFINITIONS

The following definitions apply to the provisions of Chapter 4:

EQUIVALENT PILE DEPTH TO FIXITY: Depth at which a pile may be modeled as fixed with no lateral soil supports such that the same top of pile displacement results as that given by an individual lateral analysis for a given lateral load at the top of the pile.

KINEMATIC LOADING: The load imposed on a structure by movement of the surrounding soil.

PEAK GROUND ACCELERATION: Maximum ground surface acceleration for a level-ground condition.

4.3 EARTHQUAKE GROUND MOTIONS

Earthquake ground motions shall be based on seismic hazard levels defined in Table 2-1.

4.3.1 Design Earthquake (DE) Ground Motion Parameters DE ground motion parameters shall be developed using the procedures provided in ASCE 7 (2005).

4.3.2 Operating Level Earthquake (OLE) and Contingency Level Earthquake (CLE) Ground Motion Parameters OLE and CLE earthquake ground motion parameters shall be developed using one of the following probabilistic seismic hazard analysis (PSHA) methods:

a. U.S. Geological Survey (USGS) published data, adjusted for local faulting and site conditions using the procedures provided in Chapter 11 of ASCE 7 (2005), or
b. Site-specific PSHA, appropriate for local seismic sources and site conditions.

As a minimum, ground motion parameters shall include horizontal peak ground acceleration (PGA), acceleration response spectrum, and corresponding most probable magnitude of the controlling earthquake(s).

For Site Class F, as defined in ASCE 7 (2005), site-specific response analysis shall be performed.

Ground motion parameters shall be developed for damping levels as required for structural design.

If time history analyses are performed, spectrum-compatible orthogonal sets of time histories shall be developed. As a minimum, three sets of time histories shall be developed. The minimum response parameters used in analysis and design shall be taken as the envelope of the response parameters when three sets of time histories are used or the average of the response parameters when seven or more sets of time histories are used.

4.4 LIQUEFACTION AND CYCLIC DEGRADATION POTENTIAL

The potential for liquefaction and cyclic degradation of soils in close enough proximity to affect waterfront slopes, embankments, and structures shall be evaluated. The effects of potential cyclic strength loss in foundation soils shall be addressed during the seismic design of the structure.

4.5 SLOPE STABILITY AND LATERAL GROUND DEFORMATION

4.5.1 Live Load Surcharge Live load surcharge shall be considered in slope stability and ground deformation analyses. The live load surcharge values for different analyses identified in Sections 4.5.2 through 4.5.5 shall be based on project-specific loading information.

4.5.2 Static Slope Stability The long-term static factor of safety of the slope or embankment shall not be less than 1.5.

4.5.3 Postearthquake Static Slope Stability The static factor of safety immediately after a DE event shall not be less than 1.1 when appropriate postearthquake shear strengths of soils are used.

4.5.4 Pseudostatic Slope Stability Pseudostatic slope stability analysis shall be performed using a horizontal seismic coefficient. The seismic coefficient shall be equal to one-half of the PGA. Shear strength values appropriate for the levels of earthquake loading shall be used in the analysis. If the estimated factor of safety is greater than or equal to 1.1, then no further evaluation for deformations or kinematic analysis as outlined in Sections 4.5.5 and 4.7.2 is required.

4.5.5 Lateral Ground Deformations If the factor of safety estimated in Section 4.5.4 is less than 1.1, the lateral ground deformations adjacent to the structure, including foundation soils, the slope or embankment, and backland areas affecting the structures shall be evaluated without considering the presence of the structure foundation system. Soil shear strength values appropriate for the levels of earthquake loading shall be used in the evaluation.

The foundation shall be evaluated for these lateral deformations. If the results indicate that the structural performance is

unacceptable, further kinematic analysis, as outlined in Section 4.7.2, is required.

4.6 FAULT RUPTURE

The effects of ground surface rupture caused by faults identified in the seismic hazard evaluation shall be addressed. Fault displacements, both in horizontal and vertical directions, shall be estimated.

4.7 LATERAL LOADINGS FOR SOIL–STRUCTURE INTERACTION

Two loading conditions for the foundation shall be considered for seismic design: (1) inertial loading and (2) kinematic loading caused by lateral ground deformations. Simultaneous application of these loading conditions shall be considered, taking into account the phasing and locations of these loads on foundation elements. The foundation shall be designed such that the structural performance is acceptable when subjected to both inertial and kinematic loadings.

4.7.1 Inertial Loading Loading associated with the inertial response of the seismic mass, as outlined in Section 3.7.3, shall be considered in the analysis. The lateral soil springs developed following the requirements of Section 4.8 shall be used in the inertial loading analyses.

4.7.2 Kinematic Loading Kinematic loading from permanent lateral ground deformation on the foundation shall be evaluated. It is permitted to include the beneficial effects of piles on lateral ground deformations.

4.8 SOIL–PILE BEHAVIOR UNDER LATERAL LOADING

4.8.1 Lateral Soil Springs For design of the piles under loading associated with the inertial response of the superstructure, level-ground inelastic lateral soil (*p-y*) springs shall be developed and used to represent soil resistance in the analysis.

Exception: The use of an equivalent pile depth to fixity is permitted to calculate displacements as discussed in Sections 5.5.3 and 6.6.6.

4.8.2 Upper- and Lower-Bound Springs To account for the uncertainties associated with the characterization of soil stiffness as well as the inherent variability of the soils, both upper-bound and lower-bound spring values (i.e., *p-y* relationships) shall be developed for use in the inertial response analyses of the structure.

4.9 SEISMICALLY INDUCED SETTLEMENT

Seismically induced settlement shall be evaluated for use in the design. Seismically induced settlement shall be estimated based on volumetric strains in both liquefied saturated soils and nonliquefied dry and unsaturated soils.

4.10 AXIAL PILE PERFORMANCE

4.10.1 Axial Pile Capacity Axial pile capacities shall be evaluated for compression and tension. Geotechnical pile capacity evaluation under axial loading shall include the effects of pile capacity reduction caused by downdrag forces induced by seismically induced settlement. The minimum factor of safety shall be greater than 1.0 when seismically induced downdrag loads are combined with the seismic structural loads on the pile.

4.10.2 Axial Pile Springs Axial pile performance evaluations shall include axial soil (*t-z*) springs for use in the analyses. The springs shall be developed either at the top of the pile or along the piles. Use of linear or nonlinear springs is permitted.

Exception: The use of an equivalent pile depth to fixity is permitted as discussed in Sections 5.5.3 and 6.6.6.

4.10.3 Upper- and Lower-Bound Springs To account for the uncertainties associated with the characterization of soil resistance along a pile and the development of *t-z* springs, both upper-bound and lower-bound spring values shall be developed.

4.11 EARTH PRESSURES

4.11.1 Seismic Earth Pressures The effect of earth pressures on pier and wharf structures resulting from seismic loading of backland soils shall be considered in addition to static pressures. The earth pressures shall include the effect of excess pore pressure generation in the backland soils.

4.12 REFERENCES

American Society of Civil Engineers (ASCE). (2005). *Minimum design loads for buildings and other structures*, ASCE 7-05, American Society of Civil Engineers, Reston, VA.

CHAPTER 5
FORCE-BASED DESIGN

5.1 INTRODUCTION

5.1.1 Scope Chapter 5 presents criteria for force-based design, which largely follows the requirements of ASCE 7 (2005).

5.2 DEFINITIONS

The following definitions apply only to the provisions of Chapter 5:

APPROVED: Acceptable to the authority having jurisdiction.

EQUIVALENT PILE DEPTH TO FIXITY: Depth at which a pile may be modeled as fixed with no lateral soil supports such that the same top of pile displacement results as that given by an individual lateral analysis for a given lateral load at the top of the pile.

5.3 SYMBOLS AND NOTATION

The following symbols and notation apply only to the provisions of Chapter 5:

A_{ch} Confined core area of pile defined by outside diameter of reinforcement in in.^{2} (m^2)
A_g Gross cross-sectional area in in.^{2} (m^2)
C_d Deflection amplification factor
C_s Seismic response coefficient
E Modulus of elasticity in kip/in.^{2} (N/m^2)
E_s Modulus of elasticity of steel in kip/in.^{2} (N/m^2)
E_c Modulus of elasticity of concrete in kip/in.^{2} (N/m^2)
f_c' Minimum 28-day strength of concrete in kip/in.^{2} (N/m^2)
f_{yh} Nominal yield strength of the spiral reinforcement in kip/in.^{2} (N/m^2)
I Importance factor (in accordance with Section 11.5.1 of ASCE 7 (2005)
I_c Gross moment of inertia of the concrete section in in.^{4} (m^4)
I_{eff} Effective moment of inertia in in.^{4} (m^4)
I_g Gross moment of inertia in in.^{4} (m^4)
I_s Gross moment of inertia of the steel section in in.^{4} (m^4)
L Length between plastic hinges in in. (m), taken as the distance between the bottom of the deck to the center of the in-ground hinge
M_o Overstrength moment capacity in kip-in. (N-m)
$M_{o,\text{top}}$ Overstrength moment capacity of the connection in kip-in. (N-m)
$M_{o,\text{bot}}$ Overstrength moment capacity of the in-ground hinge in kip-in. (N-m)
M_p Plastic moment capacity in kip-in. (N-m)
N Axial load in kips (N) (compression positive)
P Factored axial load on the pile in kips (N)
R Response modification factor
T Fundamental period of structure (s)
V Seismic base shear in kips (N)
V_{po} Overstrength shear force in kips (N)
W Total seismic weight in kips (N)
ρ_s Volumetric ratio of transverse steel

5.4 FORCE-BASED DEMAND ANALYSIS

The following force-based demand analyses are permitted.

5.4.1 Equivalent Lateral Force Analysis Where an equivalent lateral force analysis is performed, the requirements of ASCE 7 (2005) shall be satisfied except as modified herein. The requirements described in Sections 12.8.1.2, 12.8.1.3, 12.8.2.1, 12.8.3, and 12.8.4.3 of ASCE 7 (2005) shall not be applied for pile-supported piers and wharves addressed in this standard.

5.4.1.1 Seismic Base Shear The seismic base shear shall be determined in accordance with Section 12.8.1 of ASCE 7 (2005), modified as follows:

$$V = C_s W \tag{5-1}$$

where V = seismic base shear;
C_s = seismic response coefficient determined in accordance with Section 5.4.1.2; and
W = total seismic weight (dead load and applicable portion of other loads as required in Section 3.6).

5.4.1.2 Calculation of Seismic Response Coefficient The seismic response coefficient C_s shall be determined according to Section 12.8.1.1 of ASCE 7 (2005). However, design coefficients shall be chosen from Table 5-1 of this standard. The importance factor, I, shall be determined in accordance with Section 11.5.1 of ASCE 7 (2005).

5.4.1.3 Fundamental Structural Period The fundamental period of the structure, T, for any given direction shall be determined in accordance with Section 12.8.2 (except Section 12.8.2.1) of ASCE 7 (2005) using an appropriate analytical model. The effects of soil–structure interaction shall be considered in accordance with Section 4.8 of this standard.

5.4.1.4 Design Displacement Determination The design displacements shall be determined by multiplying the calculated displacements by the deflection amplification factor C_d given in Table 5-1. Drift limits specified in ASCE 7 (2005) need not be considered for structural design purposes but may be required for design of ancillary components, as described in Chapter 8.

5.4.2 Modal Response Spectrum Analysis Where a modal response spectrum analysis is performed, the requirements of

Table 5-1. Design Coefficients for Various Elements

Ductile element	R	C_d
Solid prestressed concrete piles	2	2
Steel pipe piles	2	2
Connections not meeting Chapter 7 provisions	1	1
Batter piles	1	1
Other tested connections	To be determined by experimental testing and/or finite element modeling and must be approved by the authority having jurisdiction	To be determined by experimental testing and/or finite element modeling and must be approved by the authority having jurisdiction

Table 5-2. Elastic Section Properties for Pier and Wharf Components

Pier or wharf component	$EI_{eff}/(EI_g)$
Reinforced concrete pile	$0.3 + N/(f'_c A_g)$
Pile/deck dowel connection[a]	$0.3 + N/(f'_c A_g)$
Prestressed pile[a]	$0.6 < EI_{eff}/(EI_g) < 0.75$
Steel pile	1.0
Concrete pile with steel casing	$(E_sI_s + 0.25E_cI_c)/(E_sI_s + E_cI_c)$
Deck	0.5

[a]The pile/deck connection and prestressed pile may also be approximated as one member with an average stiffness of $EI_{eff}/EI_g = 0.42$.

Section 12.9 of ASCE 7 (2005) shall be satisfied, except as modified herein. The response modification factor R and the deflection amplification factor C_d shall be taken from Table 5-1. The importance factor, I, shall be determined in accordance with Section 11.5.1 of ASCE 7 (2005).

5.5 MODELING

5.5.1 Section Properties It is permitted to use section properties given in Table 5-2 for force-based design.

5.5.2 P-delta and Slenderness Effects P-delta and slenderness effects shall be considered.

5.5.3 Pile Stiffness The use of an equivalent pile depth to fixity is permitted provided that the pile length is suitably adjusted for the unsupported length above the soil surface (i.e., above the mudline, sloping rock-fill armor, or embankment) per Section 6.6.6.

5.6 FORCE-BASED CAPACITY ANALYSIS

5.6.1 Applicable Provisions The demand obtained in Section 5.4 shall not exceed the capacity calculated in accordance with Section 5.6. The capacity of the member to resist a given action shall be the nominal capacity as determined from the applicable nationally recognized code. Strength reduction factors (i.e., ϕ factors) shall be in accordance with the applicable nationally recognized codes.

5.6.2 Shear Strength of Concrete Piles Shear strength of concrete piles shall be determined in accordance with ACI 318 (2008).

5.6.3 Confinement for Prestressed Piles In the ductile region of the piling, volumetric spiral ratio ρ_s shall not be less than

$$\rho_s = 0.25\left(\frac{A_g}{A_{ch}} - 1\right)\frac{f'_c}{f_{yh}}\left(0.5 + 1.4\frac{P}{f'_c A_g}\right)$$
$$\rho_s \geq 0.12\frac{f'_c}{f_{yh}}\left(0.5 + 1.4\frac{P}{f'_c A_g}\right) \tag{5-2}$$

where A_g = gross cross-sectional area of the piling,
A_{ch} = confined core area,
f'_c = 28-day compressive strength of the concrete,
f_{yh} = nominal yield strength of the spiral,
P = factored axial load on the pile, and
ρ_s need not be taken as larger than 0.02.

The length of the ductile region requiring this spiral ratio shall be measured three pile diameters downward from the bottom of the pile deck and shall be taken as three pile diameters either side of the point of maximum moment below ground, including cutoff allowance. Piles that are expected to respond elastically to the design earthquake (DE) are permitted to be designed for a spiral ratio that is 50% of that obtained from Eq. (5-2). However, ρ_s shall always be at least 0.005 over the entire length of all piles.

At least one-half the spiral ratio required in the ductile region shall be provided along the rest of the pile length.

In the pile's ductile region, the maximum center-to-center spacing of the spirals shall be taken as the smaller of one-fifth the least pile dimension, six times the longitudinal strand diameter, or 8 in. Spiral shall be developed per Section 7.5.2.

5.6.4 Shear Strength of Steel Pipe Piles Shear strength of steel pipe piles shall be determined in accordance with ANSI/AISC (2010), including the effects of corrosion.

5.6.5 Overstrength Shear Force Shear design shall consider the overstrength capacity of the pile-to-deck connection. The overstrength moment demand, M_o, shall be calculated from moment curvature analysis using expected material properties as defined in Section 6.5.1.

The overstrength shear force shall be determined as follows unless indicated otherwise by a detailed inelastic soil–pile interaction analysis:

$$V_{po} = \frac{M_{o,\text{top}} + M_{o,\text{bot}}}{L} \tag{5-3}$$

where $M_{o,\text{top}}$ = overstrength moment capacity of the connection,
$M_{o,\text{bot}}$ = overstrength moment capacity of the in-ground hinge, and
L = length between plastic hinges, taken as the distance between the bottom of the deck to the center of the in-ground hinge.

5.6.5.1 Capacity Protection of the Deck All pile-to-deck connections shall be strong deck–weak pile connections. The deck shall be capacity protected by designing and detailing the deck to resist the design plastic hinge mechanism based on expected material properties defined in Section 6.5 times an overstrength factor of 1.0 for all structures.

5.7 REFERENCES

American Concrete Institute (ACI). (2008). *Building code requirements for structural concrete* (ACI 318-08) and Commentary (ACI 318R-08), American Concrete Institute, Farmington Hills, MI.

American National Standards Institute/American Institute of Steel Construction (ANSI/AISC). (2010). *Specification for structural steel buildings,* ANSI/AISC 360-10, American National Standards Institute/American Institute of Steel Construction, Chicago.

American Society of Civil Engineers (ASCE). (2005). *Minimum design loads for buildings and other structures,* ASCE 7-05, American Society of Civil Engineers, Reston, VA.

This page intentionally left blank

CHAPTER 6
DISPLACEMENT-BASED DESIGN

6.1 GENERAL

6.1.1 Scope Chapter 6 describes displacement-based methods used to determine seismic demands and capacities for pier and wharf structures.

6.2 DEFINITIONS

The following definitions apply to the provisions of Chapter 6:

APPROVED: Acceptable to the authority having jurisdiction.

EQUIVALENT PILE DEPTH TO FIXITY: Depth at which a pile may be modeled as fixed with no lateral soil supports such that the same top of pile displacement results as that given by an individual lateral analysis for a given lateral load at the top of the pile.

SUBSTITUTE STRUCTURE METHOD: A nonlinear static demand analysis methodology that employs an iterative process using design spectra with effective secant stiffness at the response displacement to determine the displacement demand for each iteration.

6.3 SYMBOLS AND DEFINITIONS

The following symbols and notation apply only to the provisions of Chapter 6:

A_e Effective shear area in in.^{2} (m^2)
A_g Gross cross-sectional area in in.^{2} (m^2)
A_{sp} Cross-sectional area of transverse reinforcement in in.^{2} (m^2)
c Depth from extreme compression fiber to neutral axis at flexural strength in in. (m)
c_o Distance from outside of pile to center of transverse reinforcement in in. (m)
d_b Longitudinal bar diameter in in. (m)
d_{st} Strand diameter in in. (m)
D Diameter or gross dimension of pile in in. (m)
D' Diameter of confining reinforcement core in in. (m)
E_s Modulus of elasticity of steel in kip/in.^{2} (N/m^2)
E_{ps} Modulus of elasticity of prestressing steel in kip/in.^{2} (N/m^2)
f_c' Minimum 28-day strength of concrete in kip/in.^{2} (N/m^2)
f_{cc}' Confined concrete strength in kip/in.^{2} (N/m^2)
f_{ce}' Expected strength of unconfined concrete in kip/in.^{2} (N/m^2)
f_l' Effective lateral confining stress in kip/in.^{2} (N/m^2)
f_{py} Yield strength of prestressing steel in kip/in.^{2} (N/m^2)
f_{pye} Expected yield strength of prestressing steel in kip/in.^{2} (N/m^2)
f_{pu} Ultimate tensile strength of prestressing steel in kip/in.^{2} (N/m^2)
f_{pue} Expected ultimate tensile strength of prestressing steel in kip/in.^{2} (N/m^2)
f_u Ultimate stress in the structural steel or prestressing strand in kip/in.^{2} (N/m^2)
f_{ue} Expected ultimate stress in the structural steel or prestressing strand in kip/in.^{2} (N/m^2)
f_y Yield strength in the structural steel or prestressing strand in kip/in.^{2} (N/m^2)
$f_{y,shell}$ Nominal yield stress of the pile in kip/in.^{2} (N/m^2)
f_{ye} Expected yield stress of structural steel in kip/in.^{2} (N/m^2)
f_{yh} Yield strength of transverse reinforcement in kip/in.^{2} (N/m^2)
f_{yhe} Expected yield strength of confining steel in kip/in.^{2} (N/m^2)
F_p Prestress compressive force in pile in kips (N)
g Gap distance from bottom of deck to edge of pipe pile or external confinement in in. (m)
H Distance from the location of maximum in-ground moment to the center of gravity of the deck in in. (m)
I_{eff} Effective moment of inertia in in^4 (m^4)
k Curvature ductility factor
K_i Initial stiffness in kip/in. (N/m)
K_e Confinement effectiveness coefficient, equal to 0.95 for circular cores
K_{eff} Effective secant stiffness in kip/in (N/m)
$K_{eff,n}$ Effective secant stiffness at step n of iteration in kip/in. (N/m)
l Unbraced length of the pile in in. (m)
L' Distance from point of contraflexure in pile above-ground to pile–deck interface in in. (m)
L_p Plastic hinge length in in. (m)
L_s Equivalent pile depth to fixity in in. (m)
L_{sp} Strain penetration length in in. (m)
m Structure mass in kip-s^2/in. (kg)
M_o Overstrength moment capacity in kip-in. (N-m)
M_p Idealized plastic moment capacity in kip-in. (N-m)
M_y Moment at first yield in kip-in. (N-m)
N_u External axial load on pile in kips (N) (compression positive)
r Ratio of secondary slope over initial (elastic) slope (as used in Eq. (6-16)
s Center-to-center spacing of transverse reinforcement along pile axis in in. (m)
$S_{A,n}$ Spectral response acceleration at period T_n at step n of iteration in g
t Shell thickness in in. (m)
T Fundamental period of structure (s)

T_n Fundamental period of structure at step n of iteration (s)
T_o Period corresponding to the peak of the acceleration response spectrum (s)
V_a Shear strength caused by axial load in kips (N)
V_c Shear strength from concrete in kips (N)
V_{design} Design shear in kips (N)
V_n Nominal shear strength in kips (N)
V_o Overstrength shear demand in kips (N)
V_p Base shear strength/total lateral force of the structure from nonlinear static pushover analysis in kips (N)
V_s Transverse reinforcement shear strength in kips (N)
V_{ye} Effective base shear force at yield displacement in kips (N)
W Total seismic weight (dead load plus relevant live load) in kips (N)
α Angle between line joining centers of flexural compression in the deck/pile and in-ground hinges and the pile axis (radians)
Δ Displacement demand in in. (m)
Δ_d Displacement demand in in. (m)
$\Delta_{d,n}$ Displacement demand at iteration n in in.
Δ_{DE} Displacement in in. (m)
Δ_{ye} Effective yield displacement in in. (m)
ε_c Concrete extreme fiber strain
ε_{cc} Confined concrete strain at peak stress
ε_{co} Unconfined concrete strain of 0.002
ε_{cu} Ultimate concrete compression strain
ε_{pue} Expected ultimate strain for prestressing steel taken as 0.035
ε_{pye} Expected yield strain for prestressing steel
ε_{spall} Unconfined spalling strain of the concrete taken as 0.005
ε_{sh} Strain in the structural steel at the onset of strain hardening
ε_{smd} Strain in the structural steel at maximum stress
ε_{ye} Expected yield strain in the structural steel or prestressing strand
ρ_s Effective volumetric ratio of confining steel
θ Angle of critical crack to the pile axis (radians)
θ_m Total rotation at the operating level earthquake (OLE), contingency level earthquake (CLE), or design earthquake (DE) strain limit (radians)
θ_p Plastic rotation (radians)
$\theta_{p,m}$ Plastic rotation at the OLE, CLE, or DE strain limit (radians)
$\theta_{P,dem}$ Plastic rotation at the demand displacement (radians)
θ_u Ultimate rotation (radians)
θ_y Idealized yield rotation (radians)
μ_n System displacement ductility demand at step n of iteration
μ_ϕ Curvature ductility
$\xi_{eff,n}$ Effective system damping at step n of iteration
ϕ Strength reduction factor
ϕ_p Plastic curvature in in.$^{-1}$ (m^{-1})
$\phi_{p,m}$ Plastic curvature at the OLE, CLE, or DE strain limit in in.$^{-1}$ (m^{-1})
$\phi_{P,dem}$ Plastic curvature at the demand displacement in in.$^{-1}$ (m^{-1})
ϕ_m Curvature at the OLE, CLE, or DE strain limit in in.$^{-1}$ (m^{-1})
ϕ_u Ultimate curvature of the section in in.$^{-1}$ (m^{-1})
ϕ_y Idealized yield curvature in in.$^{-1}$ (m^{-1})
ϕ_{yi} Curvature at first yield in in.$^{-1}$ (m^{-1})

6.4 OVERVIEW OF SEISMIC DESIGN APPROACH

6.4.1 General This design approach is based on the assumption that the sizing and configuration of primary structural members has been previously defined based on service loads. Analysis and design for seismic loads shall be performed for each seismic hazard and performance level, as shown in Table 2-1. For each seismic hazard and performance level, the displacement capacity shall exceed the displacement demand.

6.4.2 Material Properties Inelastic material properties shall be defined in accordance with Section 6.5.

6.4.3 Structural Model A structural model shall be developed in accordance with Section 6.6.

6.4.4 Capacity Displacement capacity shall be calculated using the nonlinear static pushover method defined in Section 6.7 and the pile strain limits defined in Section 3.9. The displacement capacity shall be calculated for the OLE, CLE, and DE, as necessary.

6.4.5 Demand The displacement demand shall be calculated in accordance with Section 6.8 for each of the seismic hazard levels required, in accordance with Table 2-1. The design shall also consider two foundation loading conditions, as per Section 4.7.

6.4.6 Elastic and Capacity-protected Elements Structural elements that are to remain elastic or are capacity protected shall be designed in accordance with Section 6.9.

6.5 INELASTIC MATERIAL PROPERTIES

6.5.1 General Expected material properties shall be used to assess capacity and demands for earthquake loads.

Exception: Seismic shear capacity shall be based on specified material strengths.

For the evaluation of demand on capacity-protected members, an additional overstrength factor shall be used when determining the capacity of pile plastic hinges per Section 6.9. Except for shear, the expected seismic material strengths shall be the following:

$$f'_{ce} = 1.3 f'_c \tag{6-1}$$

$$f'_{ye} = 1.1 f_y \tag{6-2}$$

$$f_{yhe} = 1.0 f_{yh} \tag{6-3}$$

$$f_{pye} = 1.0 f_{py} \tag{6-4}$$

$$f_{pue} = 1.05 f_{pu} \tag{6-5}$$

where f'_c = 28-day unconfined compressive strength of concrete;
f_y = yield strength of structural steel or prestressing strand;
f_{yh} = yield strength of confining steel;
f_{py} = yield strength of prestressing steel;
f_{pu} = ultimate tensile strength of prestressing steel; and
f'_{ce}, f_{ye}, f_{yhe}, f_{pye}, f_{pue} = expected material properties.

6.5.2 Stress–Strain Curves The following stress–strain curves may be used to compute the deformation capacity of the structural members. Alternative stress–strain models are acceptable if adequately documented and supported by test results.

6.5.2.1 Concrete Stress–Strain Curves The stress–strain curves for both confined and unconfined concrete are shown in Fig. 6-1.

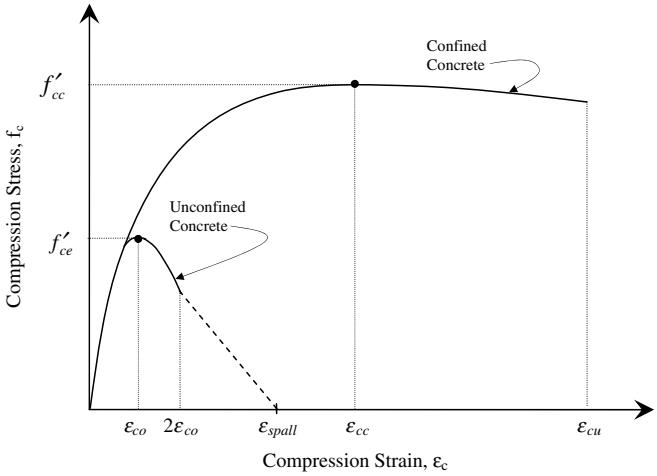

Fig. 6-1. Stress–strain relationship for confined and unconfined concrete
Source: Port of Long Beach (2012); reproduced with permission.

6.5.2.1.1 Unconfined Concrete Unconfined concrete either has no confinement steel or the spacing of the confinement steel exceeds 12 in. (0.305 m). For these cases,

ε_{spall} = Ultimate unconfined compression (spalling) strain, taken as 0.005, and
ε_{co} = Unconfined compression strain at the maximum compressive stress, taken as 0.002.

6.5.2.1.2 Confined Concrete To be considered as confined concrete, the spiral shall be anchored per Section 7.5.2. For confined concrete, the following are defined:

$$\varepsilon_{cu} = 0.005 + 1.1\rho_s \le 0.025 \tag{6-6}$$

$$\varepsilon_{cc} = \varepsilon_{co}\left[1 + 5\left(\frac{f'_{cc}}{f'_{ce}} - 1\right)\right] \tag{6-7}$$

$$f'_{cc} = f'_{ce}\left(-1.25 + 2.25\sqrt{1 + \frac{7.94 f'_l}{f'_{ce}}} - 2\frac{f'_l}{f'_{ce}}\right) \tag{6-8}$$

where for circular core sections

$$f'_l = \frac{1}{2} K_e \rho_s f_{yh} \tag{6-9}$$

$$\rho_s = \frac{4A_{sp}}{D's} \tag{6-10}$$

ρ_s = effective volumetric ratio of confining steel;
A_{sp} = cross-sectional area of transverse reinforcement;
D' = diameter of transverse reinforcement core, measured to the outside of the reinforcement;
s = center-to-center spacing of transverse reinforcement along pile axis;
f_{yh} = yield strength of transverse reinforcement;
ε_{cu} = ultimate concrete compression strain;
ε_{cc} = confined concrete strain at peak stress;
f'_l = effective lateral confining stress;
K_e = confinement effectiveness coefficient, equal to 0.95 for circular cores;
f'_{ce} = expected concrete strength; and
f'_{cc} = confined concrete strength.

6.5.2.2 Reinforcing Steel Stress–Strain Curves The stress–strain curve for reinforcing steel is shown in Fig. 6-2. The stress–strain curve for structural steel is similar to the curve for the reinforcing steel.

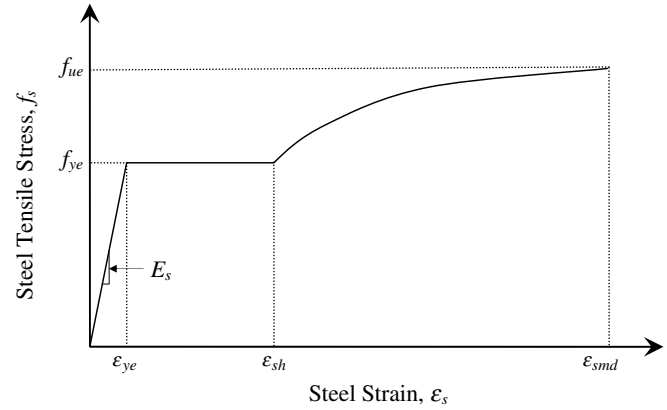

Fig. 6-2. Stress–strain relationship for reinforcing steel
Source: Port of Long Beach (2012)

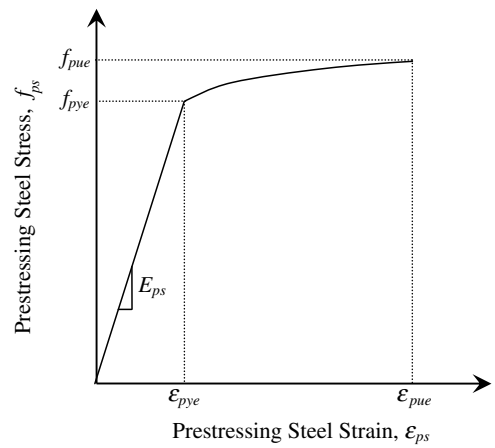

Fig. 6-3. Stress–strain relationship for prestressing tendons
Source: Port of Long Beach (2012)

For ASTM A706 Grade 60 steel:

Onset of strain hardening
$$\varepsilon_{sh} = \begin{cases} 0.0150 & \text{\#8 bars and smaller} \\ 0.0125 & \text{\#9 bars} \\ 0.0115 & \text{\#10 and \#11 bars} \\ 0.0075 & \text{\#14 bars} \\ 0.0050 & \text{\#18 bars} \end{cases}$$

Strain at maximum stress
$$\varepsilon_{smd} = \begin{cases} 0.120 & \text{\#10 bars and smaller} \\ 0.090 & \text{\#11 bars and larger} \end{cases}$$

$$f_{ue} = 1.4 f_{ye}$$

where f_{ue} = expected ultimate tensile strength of steel;
E_s = modulus of elasticity of steel; and
ε_{ye} = expected yield strain of steel.

6.5.2.3 Prestressing Steel The stress–strain curve for prestressing steel is shown in Fig. 6-3.

E_{ps} = modulus of elasticity for prestressing steel;
ε_{pye} = expected yield strain for prestressing steel;
ε_{pue} = expected ultimate strain for prestressing steel, taken as 0.035;

f_{pye} = expected yield strength of prestressing steel, equal to $0.85f_{pue}$; and
f_{pue} = expected ultimate tensile strength of prestressing steel.

6.6 MODELING

6.6.1 Section Properties Section properties (i.e., member stiffness) shall be determined using the following methods:

a. Use moment–curvature analysis of the cross section for nonlinear load deformation relations, as described in Section 6.6.2, or
b. Use Table 5-2 for elastic properties.

6.6.2 Moment–Curvature Analysis The idealized plastic moment capacity, M_p, of the piles shall be calculated by moment–curvature (M–ϕ) analysis based on expected material properties. The analysis must be capable of separately modeling the core and cover concrete and must be capable of representing the enhanced concrete strength of the core concrete.

The pile in-ground hinge section shall be analyzed as a fully confined section because of the soil confinement. The analysis shall include the pile axial load and the effective prestress force.

The M–ϕ curve may be idealized by an elastic perfectly plastic response to estimate the plastic moment capacity using the methods of Sections 6.6.2.1 or 6.6.2.2.

6.6.2.1 Moment–Curvature Curve Idealization: Method A Method A applies for M–ϕ curves that experience a reduction in section moment capacity because of spalling of the cover. For this condition, which applies to prestressed concrete piles, the idealized plastic moment capacity M_p shall be taken at a concrete extreme fiber strain, ε_c = 0.004, as shown in Fig. 6-4. If the second peak on the curve is less than the idealized M_p value, the moment at the lower second peak should be taken as M_p. However, for capacity protection analysis, the moment at the higher peak shall be used for M_p. The elastic portion of the idealized M–ϕ curve passes through the curvature at the first reinforcing bar yield of the section or when concrete strain equals 0.002, whichever occurs first, and extends to meet M_p.

6.6.2.2 Moment–Curvature Curve Idealization: Method B Method B applies for M–ϕ curves that do not experience a reduction in section moment capacity, as shown in Fig. 6-5. For these types, an equal area approach is permitted. For this approach, the elastic portion of the idealized M–ϕ curve passes through the point marking the first reinforcement bar yield or when ε_c = 0.002, whichever comes first (ϕ_{yi}, M_y). The idealized plastic moment capacity is obtained by balancing the areas between the actual and the idealized M–ϕ curves beyond the first yield point (Fig. 6-5)

where M_y = moment at first yield, corresponding to ϕ_{yi};
ϕ_{yi} = curvature at first yield (first rebar yield or ε_c = 0.002);
ϕ_y = idealized yield curvature;
ϕ_m = curvature at the OLE, CLE, or DE strain limit; and
ϕ_u = ultimate curvature of the section.

6.6.3 Plastic Rotation The plastic rotation, θ_p, shall be determined from the results of moment curvature analysis using the following expression:

$$\theta_{p,m} = L_p\phi_{p,m} = L_p(\phi_m - \phi_y) \qquad (6\text{-}11)$$

where L_p = plastic hinge length;
$\theta_{p,m}$ = plastic rotation for the OLE, CLE, or DE strain limit; and
$\phi_{p,m}$ = plastic curvature for the OLE, CLE, or DE strain limit.

The idealized moment–rotation (M–θ) diagram is shown in Fig. 6-6

where θ_u = ultimate rotation;
θ_y = idealized yield rotation= $\phi_y L_p$

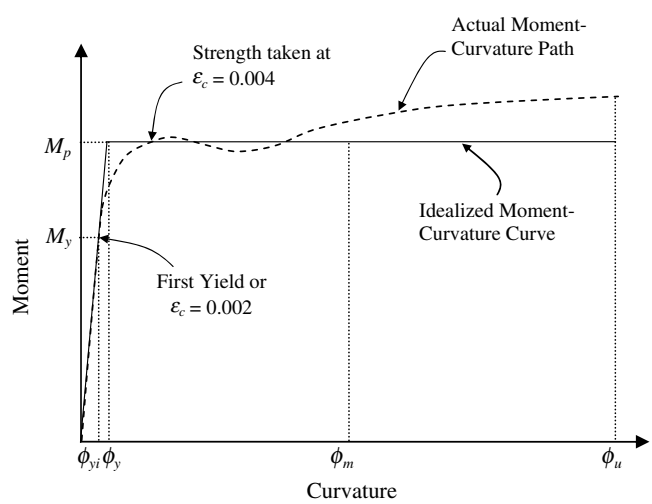

Fig. 6-4. Moment–curvature curve and idealization for method A
Source: Port of Long Beach (2012)

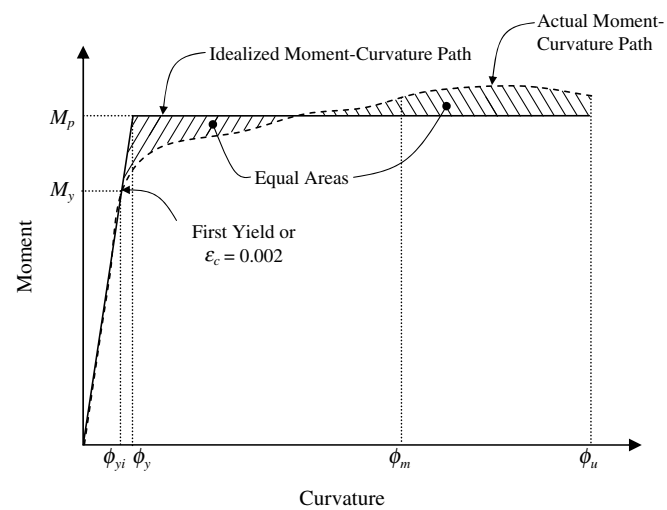

Fig. 6-5. Moment–curvature and idealization for method B
Source: Port of Long Beach (2012)

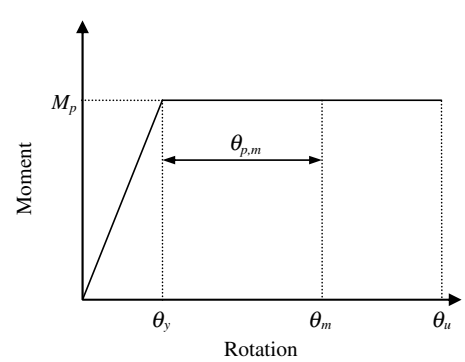

Fig. 6-6. Idealized moment–rotation curve
Source: Port of Long Beach (2012)

Table 6-1. Plastic Hinge Length

Connection type Steel pipe piles	L_p at deck (in.)
Embedded pile	$0.5D$ (see Section 7.4.3.3)
Concrete plug	$0.30f_{ye}d_b$
Isolated shell	$0.30f_{ye}d_b + g$
Welded embed	$0.5D$ (See Section 7.4.2.4)
Welded dowels	NA
Prestressed concrete piles	
Pile buildup	$0.15f_{ye}d_b \leq L_p \leq 0.3f_{ye}d_b$
Extended strand	$0.2f_{pye}d_{st}$
Embedded pile	$0.5D$ (see Section 7.4.2.1)
Dowelled	$0.25f_{ye}d_b$
Hollow dowelled	$0.2f_{ye}d_b$
External confinement	$0.30f_{ye}d_b$
Isolated interface	$0.25f_{ye}d_b$
Other connections	
Pinned connection	NA
Batter pile	See Section 7.4.4.2

Note: Table uses English units. Metric equivalent is not provided.

θ_m = total rotation at the OLE, CLE, or DE strain limit; and
L_p = plastic hinge length.

6.6.4 Plastic Hinge Length The plastic hinge length shall be determined to convert the moment–curvature relationship into a force–displacement or moment–plastic rotation relationship for the nonlinear pushover analysis.

6.6.4.1 In-ground Plastic Hinge Length The plastic hinge length, L_p, for all in-ground hinges may be determined using Eq. (6-12):

$$L_p = 2D \tag{6-12}$$

where D = pile diameter.

This equation applies for prestressed concrete and for steel pipe piles.

6.6.4.2 Plastic Hinge Length for Pile-to-Deck Connections Plastic hinge lengths for permitted pile-to-deck connections are shown in Table 6-1.

6.6.5 Modeling Pile-to-Deck Connections The effect of connection flexibility shall be considered.

6.6.5.1 Rigid Pile-to-Deck Connections The following connections may be considered rigid provided they meet the provisions of Chapter 7:

a. Embedded steel pipe pile,
b. Steel pipe pile welded to embed plate, and
c. Embedded prestressed concrete pile.

6.6.5.2 Nonrigid Pile-to-Deck Connection The following pile-to-deck connections are considered nonrigid. The effect of strain penetration and cracking shall be considered in the model.

a. Dowelled steel pipe pile with partially embedded shell,
b. Dowelled steel pipe pile with isolated shell,
c. Prestressed concrete pile with extended strand,
d. Dowelled prestressed concrete pile,
e. Dowelled prestressed concrete pile with external confinement,
f. Hollow dowelled prestressed concrete pile, and
g. Isolated interface connection.

6.6.6 Equivalent Pile Depth to Fixity For displacement-based analysis, the equivalent lateral stiffness method of establishing an equivalent pile depth to fixity is permitted where piles are founded in shallow bedrock or where soil response is not significant. All other conditions require the use of soil springs along the embedded portion of piles. When using this approach, the equivalent depth to the point of fixity, L_s, shall be determined at the depth that produces the same top of pile displacement as that given by an individual lateral analysis for a given lateral load at the top of the pile. For different assumed displacements and different pile head conditions (free-head or fixed-head), L_s varies. The equivalent pile length shall have all soil (and associated lateral stiffness) removed above the effective point of fixity.

6.6.7 Seismic P-delta Effects P-delta effects caused by seismic loading shall be considered unless the following equation is satisfied:

$$\frac{W\Delta}{H} \leq 0.25(V_p) \tag{6-13}$$

where V_p = base shear strength/total lateral force of the structure obtained from a pushover analysis;
W = total seismic weight (dead load plus relevant live load);
Δ = displacement demand in the direction under consideration; and
H = distance from the maximum in-ground moment to center of gravity of the deck.

For structures subject to the DE stability check, the displacement demand, Δ, in Eq. (6-13) shall be calculated with the structural model modified per Section 3.10.

6.7 CAPACITY ANALYSIS

6.7.1 Analysis Procedure Selection The displacement capacity shall be determined for each of the performance levels applicable from Table 2-1. All analyses shall use either the nonlinear static pushover analysis method or the nonlinear time history analysis method.

6.7.2 Nonlinear Static Pushover Analysis Two-dimensional nonlinear static pushover analysis shall be performed in accordance with this section. Three-dimensional pushover analysis is not required but is permitted.

The pushover curve shall include the system's initial elastic response and predicted earthquake inelastic demand including displacements near and beyond the OLE, CLE, and DE displacement capacities, as required per Table 2-1.

6.8 DEMAND ANALYSIS

6.8.1 Analysis Procedure Selection The demand displacement shall be determined for each of the performance levels applicable from Table 2-1. All analyses shall use modal response spectrum analysis, nonlinear static demand analysis, or nonlinear time history analysis.

6.8.2 Modal Response Spectrum Analysis Where a modal response spectrum analysis is performed, the requirements of

this section shall be satisfied. A 3-D linear elastic model shall be used unless the deck flexibility is sufficient relative to the bents to justify a 2-D model.

6.8.2.1 Modes Sufficient modes shall be included in the analysis such that 90% of the participating mass is captured in each of the principal horizontal directions for the structure. For modal combinations, the complete quadratic combination (CQC) rule shall be used.

6.8.2.2 Lateral Stiffness If demand displacements are found to occur beyond the first yield of the structure or soil as shown in Fig. 6-7, a nonlinear static demand or nonlinear time history analysis shall be performed or the lateral stiffness shall be based on the effective secant stiffness K_{eff}, as shown in Fig. 6-7.

6.8.3 Nonlinear Static Demand Analysis Where a nonlinear static demand analysis is performed, the requirements of this section shall be satisfied. The substitute structure method is permitted for nonlinear static demand analysis. Where required, an equivalent elastic damping representing the combined effects of elastic and hysteretic damping shall be introduced. Multidirectional effects shall be addressed per Section 3.6.2.

6.8.3.1 Structural Period The fundamental period for a given iteration n, T_n, of the structure in the direction under consideration shall be calculated as follows:

$$T_n = 2\pi\sqrt{\frac{m}{K_{\text{eff},n}}} \tag{6-14}$$

where m = structure mass; and
$K_{\text{eff},n}$ = effective secant stiffness at step n of iteration.

Secant stiffness shall be taken as the initial stiffness, K_i, when demand displacement is less than the first yield of the structure or soil (as shown in Fig. 6-7). Where demand displacements exceed this first yield, effective secant stiffness is determined at the demand displacement, as shown in Fig. 6-7.

6.8.3.2 Target Displacement Demand The target displacement demand of the structure at iteration n, $\Delta_{d,n}$, shall be calculated as follows:

$$\Delta_{\text{d},n} = \text{S}_{A,n}\frac{T_n^2}{4\pi^2} \tag{6-15}$$

where $S_{A,n}$ = spectral response acceleration (in in./s^2) at period T_n (in s) at iteration n.

An iteration shall be satisfied by solving for $\Delta_{d,n} = \Delta_{d,(n-1)}$ used to determine $K_{\text{eff},n}$ to within an acceptable tolerance. All loads used for evaluation of protected elements shall be determined at displacement $\Delta_{d,n}$ or greater.

6.8.3.3 Effective System Damping It is permitted to use an increased effective system damping to calculate the displacement demand. The effective system damping is calculated using Eq. (6-16):

$$\xi_{\text{eff},n} = 0.05 + \frac{1}{\pi}\left(1 - \frac{1-r}{\sqrt{\mu_n}} - r\sqrt{\mu_n}\right) \tag{6-16}$$

where $\xi_{\text{eff},n}$ = effective system damping at iteration n;
r = ratio of secondary slope over initial (elastic) slope (see Fig. 6-7); and
μ_n = system displacement ductility demand at iteration n.

The effective yield displacement, Δ_{ye}, is the system displacement found from the intersection of the initial (elastic) and secondary slope segments of the bilinear approximation, as shown in Fig. 6-7. It is permitted to use the "equal energy" approach to estimate the bilinear approximation of the system pushover curve. The system displacement ductility demand is found from Eq. (6-17):

$$\mu_n = \frac{\Delta_{d,n}}{\Delta_{\text{ye}}} \tag{6-17}$$

6.8.4 Nonlinear Time History Analysis Where nonlinear time history analysis is performed, the requirements of this section shall be satisfied.

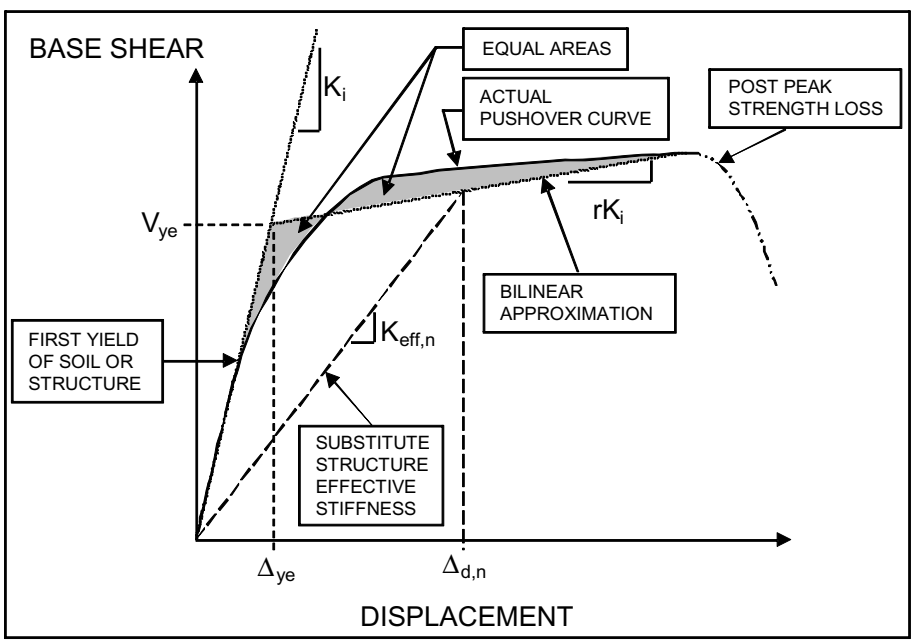

Fig. 6-7. Effective stiffness from pushover analysis

Source: Port of Long Beach (2012)

6.8.4.1 Acceleration Records Multiple acceleration records shall be used in accordance with Chapter 4 of this standard.

6.8.4.2 Lower Limit Displacements Results from time history analysis shall be compared with results obtained from nonlinear static demand analysis to ensure that results are reasonable. Displacements calculated from the nonlinear time history analyses may be used directly in design but shall not be less than two-thirds of the values obtained from Section 6.8.2.

6.9 DEMAND LOADS ON PROTECTED ELEMENTS

6.9.1 General For the evaluation of capacity-protected members and actions, such as shear in piles, and pile shear and flexural demand on deck beams and deck slabs, the calculated demand shall be determined based on 125% of the calculated plastic strength of the yielding member.

$$M_o = 1.25 M_p \tag{6-18}$$

The maximum overstrength shear demand can be determined by

$$V_o = 1.25 V_p \tag{6-19}$$

where V_p = plastic base shear strength, which can be calculated based on pile plastic moments or as the maximum shear in the pile from both upper bound and lower bound pushover analyses;
M_p = idealized plastic moment capacity of the pile analysis;
V_o = overstrength shear demand; and
M_o = overstrength moment capacity.

6.9.2 Pile–Deck Joint Capacity Protection All pile-to-deck connections shall be strong deck–weak pile connections. Deck design moments and design shear forces shall be in equilibrium with the enhanced pile plastic moment capacity defined in this section.

6.9.3 Pile Shear Strength Check Shear strength shall be based on nominal material strengths and shear strength reduction factors. Overstrength shear demand, V_o, established from nonlinear pushover analyses shall be used as the design shear:

$$V_{\text{design}} = V_o \tag{6-20}$$

6.9.3.1 Steel Pipe Piles The shear strength of steel pipe piles shall be determined in accordance with ANSI/AISC 360-10 (2010) considering the effects of corrosion. The shear strength contribution from the concrete plug shall be neglected unless the plug is continuous in the region in which the shear is calculated and both longitudinal and spiral reinforcement are provided in the concrete plug. In such cases, the reduced nominal shear strength ϕV_n of the composite pipe pile and concrete plug may be calculated as follows:

$$\phi V_n = \phi(\pi/2) t f_{y,\text{shell}} (D - c - c_o) \cot(35°) \tag{6-21}$$

where t = shell thickness;
$f_{y,\text{shell}}$ = nominal yield stress of the pipe;
D = outside diameter of pile;
c = depth from extreme compression fiber to neutral axis at flexural strength;
c_o = distance from outside of pile to center of transverse reinforcement; and
ϕ = 0.85.

6.9.3.2 Concrete Piles The following applies to concrete piles and to the pile–deck connection of steel pipe piles with dowels and concrete plug. The nominal shear strength, V_n, shall be calculated using the method described and is dependent on the curvature ductility, μ_ϕ.This nominal shear strength shall be based on separate contributions to shear capacity as follows:

$$V_n = V_c + V_s + V_a \tag{6-22}$$

where V_n = nominal shear strength;
V_c = shear strength from concrete (from Eq. [6-24]);
V_s = transverse reinforcement shear strength (from Eqs. [6-26] and [6-27]); and
V_a = shear strength caused by axial load (from Eq. [6-28]).

A shear strength reduction factor ϕ = 0.85 shall be applied to the nominal strength for OLE and CLE conditions to determine the design shear strength. A value of ϕ =1.0 shall be used for the DE case:

$$V_o \le \phi V_n \tag{6-23}$$

6.9.3.2.1 Concrete Pile Shear Strength

$$V_c = \frac{k\sqrt{f_c'} A_e}{1000} \tag{6-24}$$

where V_c = concrete shear strength in kips;
k = curvature ductility factor as a function of curvature ductility, μ_ϕ, per Fig. 6-8 (note that the values for k are specific to working in units of psi);
A_e = effective shear area (80% of gross cross-sectional area, A_g, for solid circular and octagonal piles) in in.^{2}; and
f_c' = strength of unconfined concrete (in psi).

The curvature ductility shall be calculated at the demand displacement and can be found using the following formula:

$$\mu_\phi = 1 + \frac{\phi_{P,\text{dem}}}{\phi_y} = 1 + \frac{\phi_{P,\text{dem}}}{L_p \phi_y} \tag{6-25}$$

where $\phi_{P,\text{dem}}$ = plastic curvature at the demand displacement;
ϕ_y = idealized yield curvature of the pile;
$\theta_{P,\text{dem}}$ = plastic rotation at the demand displacement; and
L_p = plastic hinge length.

6.9.3.2.2 Transverse Reinforcement (Truss) Mechanism Shear Strength Spirals:

$$V_s = \frac{\pi}{2} \frac{A_{\text{sp}} f_{\text{yh}} (D - c - c_o) \cot(\theta)}{s} \tag{6-26}$$

where A_{sp} = cross-sectional area of spiral;
f_{yh} = yield strength of transverse reinforcement;
D = pile diameter or gross depth (in the case of a rectangular pile with spiral confinement);
c = depth from extreme compression fiber to neutral axis (N.A. in Fig. 6-9) at flexural strength;
c_o = distance from outside of pile to center of transverse reinforcement (see Fig. 6-9);
θ = angle of critical crack to the pile axis (see Fig. 6-9) taken as 30° for existing structures and 35° for new design; and
s = center-to-center spacing of transverse reinforcement along pile axis.

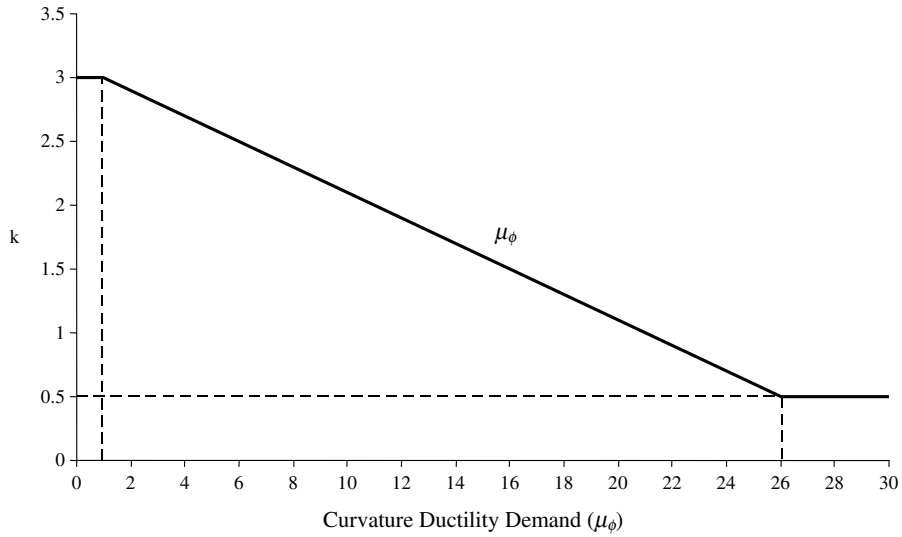

Fig. 6-8. Relationship between curvature ductility factor *k* and curvature ductility demand
Source: Port of Long Beach (2012)

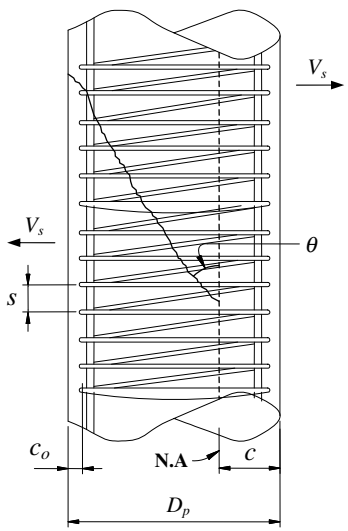

Fig. 6-9. Transverse shear mechanism
Source: Port of Long Beach (2012)

Rectangular stirrups:

$$V_s = \frac{A_{sp} f_{yh}(D - c - c_o)\cot(\theta)}{s} \tag{6-27}$$

where A_{sp} = cross-sectional area of stirrups.

6.9.3.2.3 Shear Strength from Axial Mechanism

$$V_a = \beta(N_u + F_p)\tan(\alpha) \tag{6-28}$$

where N_u = external axial load on pile including seismic load (compression is taken as positive, and tension as negative);
F_p = prestress compressive force in pile;
α = angle between line joining centers of flexural compression in the deck/pile and in-ground hinges and the pile axis (see Fig. 6-10); and
β = 0.85.

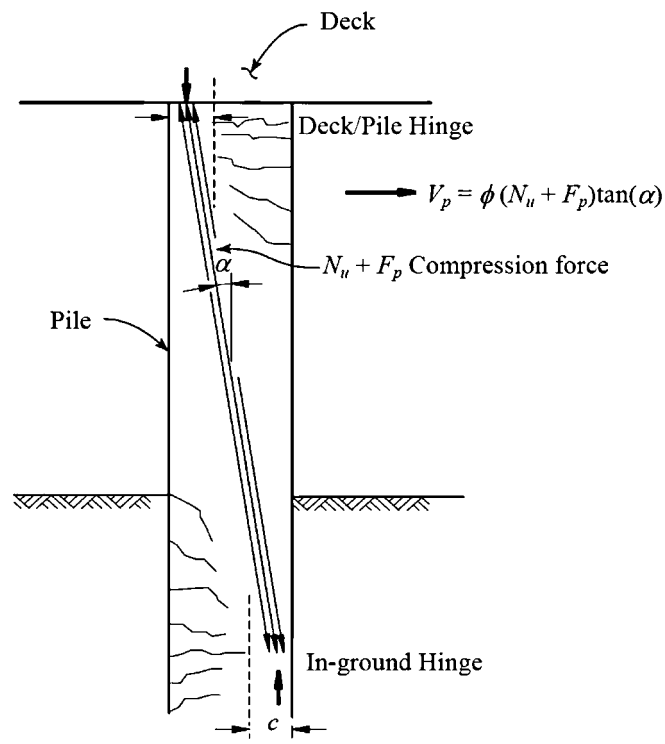

Fig. 6-10. Axial force shear mechanism
Source: Port of Long Beach (2012)

Prestress compressive force F_p in the top hinge shall be taken as zero.

As an alternative to this method, it is permitted to calculate the shear strength in accordance with the provisions of ACI 318 (2008) for piles with curvature ductility $\mu_\phi < 2$.

6.9.4 Deck Capacity Protection The nominal strength capacity of the pile cap or deck shall be sufficient to ensure that the piles have reached their plastic limit before the pile cap or deck reaching its expected nominal strength. The pile cap or deck

shear and flexural capacities shall be based on ACI 318 (2008) using strength reduction factors. The superstructure flexural capacity shall be greater than the largest combination of deck dead load moment, deck moment caused by live load, and pile overstrength moment distributed on each side of the pile joint. Any distribution factors shall be based on cracked sectional properties.

6.10 REFERENCES

American Concrete Institute (ACI). (2008). *Building code requirements for structural concrete* (ACI 318-08) and Commentary (ACI 318R-08), American Concrete Institute, Farmington Hills, MI.

American National Standards Institute/American Institute of Steel Construction (ANSI/AISC). (2010). *Specification for structural steel buildings,* ANSI/AISC 360-10. American National Standards Institute/American Institute of Steel Construction, Chicago.

ASTM Standard A706/A706M. (2013). "Standard Specification for Low-Alloy Steel Deformed and Plain Bars for Concrete Reinforcement," ASTM International, West Conshohocken, PA, DOI: 10.1520/A0706_A0706M, www.astm.org.

Port of Long Beach. (2012). "Port of Long Beach Wharf Design Criteria," WDC Version 3.0.

This page intentionally left blank

CHAPTER 7
DESIGN AND DETAILING CONSIDERATIONS

7.1 INTRODUCTION

7.1.1 Scope This chapter provides design and detailing provisions.

7.2 DEFINITIONS

The following definitions apply only to the provisions of Chapter 7:

APPROVED: Acceptable to the authority having jurisdiction.

ANCHORED: When reinforcement extending form the pile into the deck is hooked inward, headed, or sufficient to develop the pile-to-deck connection at the interface and to transfer the forces from the pile into the deck.

CAPACITY PROTECTED: Designed to resist overstrength forces and moments elastically.

CONNECTION, PINNED: A connection that minimizes moments at the interface.

CONNECTION, OTHER: A pile-to-deck connection not discussed.

CUTOFF ALLOWANCE: An allowance for piles being driven short or long used in detailing of the reinforcement in the pile and connection.

DECK: Major structural components of the entire superstructure consisting of the deck slab, beams, and pile cap beam (i.e., bent beam).

DRIVING TOLERANCE: An allowance to account for piles being driven out of plan location.

FULL MOMENT CONNECTION: A connection that has at least the same strength at the interface as the body of the pile below the interface.

INTERFACE: The construction joint between the top of the pile and the deck.

JOINT REGION: The portion of deck above the pile that transfers forces and moments from the pile into the deck.

LATERAL-FORCE-RESISTING SYSTEM: Structural components that resist and distribute seismic loads from a pier or wharf structure to the supporting soil. For most pier and wharf structures, the piles and deck make up the lateral-force-resisting system, and in such cases the deck slab also acts as the diaphragm.

MUD LINE: The top of the soil supporting the pier or wharf structure.

PARTIAL MOMENT CONNECTION: Connection that is weaker at the interface than the body of the pile.

OVERSTRENGTH MOMENT: The maximum feasible moment strength of a pile based on expected material strengths used to design for shear and capacity protection of the deck components.

PILE BUILDUP: A cast-in-place concrete extension of a prestressed concrete pile that has been driven below the intended cutoff elevation.

PILE DIMENSION: Pile diameter for round and octagonal piles; side dimension for square piling.

PILE SPLICE: A section of pile that is field connected to a pile that has been driven below the intended cutoff elevation. For steel piles, this is usually accomplished by welding. For prestressed concrete piles, this is usually accomplished by a pile buildup.

PLASTIC HINGE ZONE: The region of the pile where a plastic hinge is expected to form under design earthquake ground motion.

POINT OF CONTRAFLEXURE: The point along a laterally loaded pile where the curvature reverses.

SLEEVING: The intentional debonding of reinforcement by encasing in a sleeve, taping, or other means.

STRAIN PENETRATION LENGTH: The total distance over which the inelastic strain occurs in the dowel on each side of the interface that provides additional flexibility at the connection.

7.3 SYMBOLS AND NOTATION

The following symbols and notation apply only to the provisions of Chapter 7:

A_{bb} Total area of bond bars in pile–deck connection in in.^{2} (m^2)
A_{sc} Total area of dowel bars in pile–deck connection in in.^{2} (m^2)
A_{sjf} Additional flexural reinforcement area in in.^{2} (m^2)
A_{sjj} Total area of vertical stirrups inside the pile–deck joint in in.^{2} (m^2)
A_{sjv} Additional vertical transverse reinforcement area in in.^{2} (m^2)
A_{st} Total area of longitudinal pile reinforcement developed into the deck in in.^{2} (m^2)
b_b Width of the pile cap in in. (m)
b_{je} Effective joint width in in. (m)
d_b Longitudinal bar diameter in in. (m)
D Pile diameter or side dimension for square piling in in. (m)
D' Confined core diameter in in. (m)
E_s Modulus of elasticity of steel in kip/in.^{2} (N/m^2)
f_h Average axial horizontal stress in kip/in.^{2} (N/m^2)
f'_c Nominal 28-day concrete compressive strength in kip/in.^{2} (N/m^2)
f'_{ce} Expected concrete compressive strength in kip/in.^{2} (N/m^2)
f_s Permitted spiral steel stress in kip/in.^{2} (N/m^2)
f_v Average axial vertical stress in kip/in.^{2} (N/m^2)

f_{ye} Expected yield strength of reinforcement in kip/in.^{2} (N/m^2)
f_{yh} Nominal yield strength of transverse reinforcement in kip/in.^{2} (N/m^2)
F_y Nominal yield strength of bar or spiral reinforcement in kip/in.^{2} (N/m^2)
h_b Depth of the pile cap or deck in in. (m)
l_a Actual embedment length provided in in. (m)
l_{ac} Anchorage length provided for the longitudinal pile reinforcement in in. (m)
L_p Analytical plastic hinge length in in. (m)
M_o Overstrength moment in kip-in. (N-m)
M_p Plastic moment in kip-in. (N-m)
P_b Axial load in the beam including prestress in kips (N)
p_c Principal compression stress in kip/in.^{2} (N/m^2)
P_{col} Axial load in the pile considering dead load and overturning effects in kips (N)
p_t Principal tension stress in kip/in.^{2} (N/m^2)
v_j Average joint shear stress in kip/in.^{2} (N/m^2)
Y Minimum pile embedment into the deck for a steel pipe or prestressed concrete pile in in. (m)
α Concrete factor
θ_y Yield rotation (radians)
ρ Volumetric ratio of longitudinal dowel reinforcement
ρ_s Effective volumetric ratio of transverse reinforcement
ϕ Strength reduction factor

7.4 PILE-TO-DECK CONNECTIONS

7.4.1 Connection Selection Pile-to-deck connections shall be selected to provide the overall seismic performance of the structure consistent with the provisions of this standard. The connections may be full or partial moment connections. More than one connection type may be used for a given structure. Permitted connection types are listed in Table 7-1. This standard does not intend to limit "Other connections" to the types listed in Table 7-1 or to prevent those connections without strain limits provided in Section 3.9 from being used. Connection types not listed in Table 7-1 and connections without strain limits provided in Section 3.9 are permitted as long as the response characteristics are determined by experimental testing, finite element modeling, or other analysis that considers the nonlinear response of the connection. (See Table 6-1 for plastic hinge lengths.) Provisions for each connection type follow. Connection terminology is shown in Fig. 7-1.

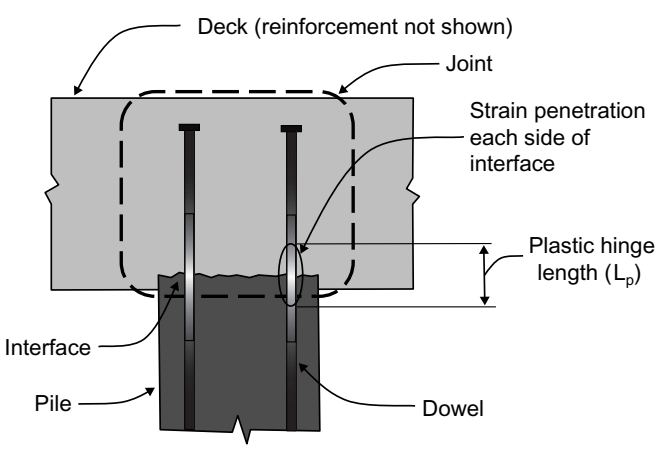

Fig. 7-1. Pile-to-deck connection terminology

Table 7-1. Pile-to-Deck Connections

Connection	Referenced section	Permitted moment–curvature analysis method(s)	Strain limits provided[a]
Steel pipe pile connections	**7.4.2**		
Embedded pile	7.4.2.1	Method B	—[b]
Concrete plug	7.4.2.2	Method B	Yes
Isolated shell	7.4.2.3	Method B	Yes
Welded embed	7.4.2.4	Method B	No
Welded dowels	7.4.2.5	NA	No
Prestressed concrete pile connections	**7.4.3**		
Pile buildup	7.4.3.1	Method A	No
Extended strand	7.4.3.2	Method A	No
Embedded pile	7.4.3.3	Method A	No
Dowelled	7.4.3.4	Method A or B	Yes
Hollow dowelled	7.4.3.5	Method A or B	Yes
External confinement	7.4.3.6	Method B	Yes
Isolated interface	7.4.3.7	Method A or B	Yes
Other connections[c]	**7.4.4**		
Pinned connections	7.4.4.1	Method B	No
Batter pile connections	7.4.4.2	Method A or B	No

[a]As provided in Tables 3-1, 3-2, and 3-3
[b]Use same strain limits as in-ground hinge.
[c]Other connections are permitted as discussed in Section 7.4.1.

7.4.2 Steel Pipe Pile Connections

7.4.2.1 Embedded Pile The minimum pile embedment Y (in.) shall be determined in accordance with Eq. (7-1) as required to prevent compression failure of the surrounding concrete in the deck. A greater embedment may be required by joint shear requirements.

$$Y = \sqrt{\frac{4M_{po}}{f_c' \alpha D}} \tag{7-1}$$

where M_{po} = 1.3 times M_p of the pile (using expected material properties) in kip-in.;
α = 0.72 for $f_c' \leq 4{,}000$ psi; decreasing 0.04 for every 1,000 psi increase with a minimum $\alpha \geq 0.56$ (metric equivalent not given);
D = outside diameter of the pipe pile (in.); and
f_c' = 28-day compressive strength of the concrete (kip/in.^{2}).

If the pile is not concrete filled over its entire length, a concrete plug shall be detailed to extend a minimum of one pile diameter below the bottom of the deck to prevent buckling of the pile wall unless a shorter extension is justified by calculation.

The strain limits in Section 3.9 are not applicable to this connection.

7.4.2.2 Concrete Plug The concrete plug connection shall be analyzed using moment–curvature analysis Method B, taking into account the following:

a. Effect of the large crack that occurs at the interface,
b. Effect of confinement by the steel pipe on the concrete plug, and
c. For the purposes of calculating connection overstrength, the bearing stress f_p at the interface between the pile and the deck shall be taken as

$$\phi 8 f'_{ce} \leq f_p \leq \phi f_{ye} \quad (7\text{-}2)$$

where $\phi = 1.0$ for calculation of connection overstrength;
$\phi = 0.65$ for calculation of connection nominal strength;
f'_{ce} = expected deck concrete compressive strength; and
f_{ye} = pile expected yield strength.

The effect of shear transfer between the concrete plug and shell shall be considered. The minimum length of the plug shall be the greater of the following:

a. Two pile diameters, or
b. The confined tension development length of dowels embedded in the plug.

Shear rings or other positive means of anchoring the plug in the shell shall be considered if the connection has tension in addition to moment.

7.4.2.3 Isolated Shell The gap between the pile shell and the deck shall be greater than 0.5 in. (0.0127 m) but less than 2 in. (0.0508 m). The following shall be considered in the design and analysis of this connection:

a. The effect of confinement by the steel pipe on the concrete plug, and
b. If a discontinuous concrete plug is used (i.e., the pile is not filled with concrete the full length), the interface between the plug and the pile shell shall be designed to transfer gravity and seismic loads to the shell by a positive means.

7.4.2.4 Welded to Embed The following shall be considered in the design of this connection:

a. Effect of eccentricity caused by pile driving tolerances,
b. Strength and ductility of the embed plate,
c. Effect of strain penetration and sleeving if used, and
d. Strength and ductility of the pile to embed plate weld.

The strain limits in Section 3.9 are not applicable to this connection.

7.4.2.5 Welded Dowels It is permitted to weld dowels to a pipe pile shell, provided that the dowels are designed to remain elastic in the design earthquake (DE). In addition, the welds shall be designed to develop 1.25 times the expected nominal yield strength, F_{ye}, of the reinforcement.

The strain limits in Section 3.9 are not applicable to this connection.

7.4.3 Prestressed Concrete Pile Connections 7.4.3.1 Pile Buildup A pile buildup shall be considered as cast-in-place concrete construction and detailed in accordance with ACI 318 (2008).

7.4.3.1 Extended Strand Extended strand connections are permitted provided that all the strands are developed into the deck and that lateral confinement in the deck satisfies the requirements of Section 7.7.

The strain limits in Section 3.9 are not applicable to this connection.

7.4.3.2 Embedded Pile The minimum pile embedment shall be the greater of 12 in. (0.305 m), one pile diameter, one pile dimension for square piling, or 50 strand diameters unless a lesser embedment is justified by testing.

The embedded pile connection shall be analyzed, taking into account the following:

a. Limited development length of prestressing strand and mild steel in embedment length, and
b. Possible slippage of the strand.

The strain limits in Section 3.9 are not applicable to this connection.

7.4.3.3 Dowelled Piles The length of the holes in the piles to provide for the dowels shall be $2(L_p)$ + the strand to dowel development + a cutoff allowance. The dowel embedment shall not be extended into the region of the in-ground hinge. Dowel embedment into the deck shall satisfy the requirements in Section 7.7.

7.4.3.4 Hollow Dowelled Piles Hollow dowelled connections shall meet the following requirements:

a. The reinforcement is cast in a solid plug contained within the pile shell;
b. The plug is of sufficient length to prevent slipping at the interface with the pile shell; and
c. The effect of longitudinal splitting of the shell caused by lateral bearing of the plug on the shell is considered.

7.4.3.5 External Confinement External confinement connections shall meet the following requirements:

a. The confinement shall have sufficient length, strength, and stiffness to prevent spalling of the pile in the contingency level earthquake (CLE);
b. The distance between the bottom of the deck and the top of the external confinement shall be more than 0.5 in. (0.0127 m) but less than 2 in. (0.0508 m); and
c. The confinement shall be suitable for use in the marine environment.

7.4.3.6 Isolated Interface Isolated interface connections shall meet the following requirements:

a. The isolation material shall be suitable for a marine environment;
b. A positive shear transfer mechanism shall be provided in addition to the dowels; and
c. Sleeving of the dowels is permitted, provided that the effect of sleeving on connection performance is considered.

The isolated interface connection shall be analyzed using moment–curvature analysis, method A or B, taking into account the following:

a. Additional end rotation caused by the compressibility of the isolation material and the reduced concrete section size at the interface, and
b. Direct bearing of the isolation material and the pile cover concrete.

7.4.4 Other Connections Connections not discussed are permitted provided that they satisfy the criteria in this standard.

7.4.4.1 Pinned Connections The use of isolation material, sleeves around the dowels, or other means is permitted provided

that the connection satisfies all force, displacement, and compatibility demands. The connection reinforcement shall be designed to transmit the lesser of the following shear forces across the interface:

a. 1.3 times the shear associated with plastic hinge formation of the pile in the soil, or
b. 1.5 times the pile shear at the calculated seismic displacement demand.

7.4.4.2 Batter Pile Connections Batter pile connections shall be designed to satisfy the requirements of Section 3.11.

7.4.5 Sleeving of Dowels Sleeving or debonding of dowels at the pile-to-deck connection is permitted. The plastic hinge length shall be calculated as the length of the sleeve plus two bar diameters but not less than the plastic hinge length in Table 6-1. In addition, the following shall be considered:

a. Effect of the sleeve on corrosion,
b. Effect of the sleeve on shear transfer and bar buckling, and
c. Effect of the sleeve on dowel anchorage.

7.5 PILES

7.5.1 Confinement This section presents confinement requirements for piles. Confinement requirements for joints are covered in Section 7.6. Only prestressed concrete piles or reinforced concrete pile buildups require spiral confinement.

7.5.1.1 Confinement for Prestressed Piles In the plastic hinge zone of the piles, effective volumetric ratio of transverse reinforcement, ρ_s, shall meet the requirements of Chapter 6 and Eq. (7-3).

$$\rho_s \geq 0.007 \tag{7-3}$$

The length of the belowground ductile regions requiring the spiral ratio of Eq. (7-3) shall be three pile dimensions (D) plus a cutoff allowance above and below the plastic hinge length, L_p, determined in Section 6.6.4.1. At least one-half the spiral ratio required in the controlling ductile region shall be provided along the rest of the pile length. However, the minimum spiral ratio, ρ_s, outside the ductile region shall satisfy Eq. (7-4).

$$\rho_s \geq 0.005 \tag{7-4}$$

7.5.1.2 Connection Confinement Length The length of pile-to-deck connection confinement shall be taken as the more stringent of the following:

a. Plastic hinge length plus three pile dimensions (D) plus a cutoff allowance, or
b. Plastic hinge length plus the strand-to-dowel lap splice length plus a cutoff allowance.

7.5.2 Spiral Development

7.5.2.1 Deformed and Smooth Spiral Development The wire spiral shall be developed at spiral splices and the tip of the pile by one of the following methods:

a. By lapping one full turn and bending the end with a 90° hook,
b. By lapping 1.5 turns, or
c. In lieu of the aforementioned, mechanical or welded splices may be used in accordance with ACI 318 (2008). However, mechanical and welded splices must not be used in zones where plastic hinges can develop.

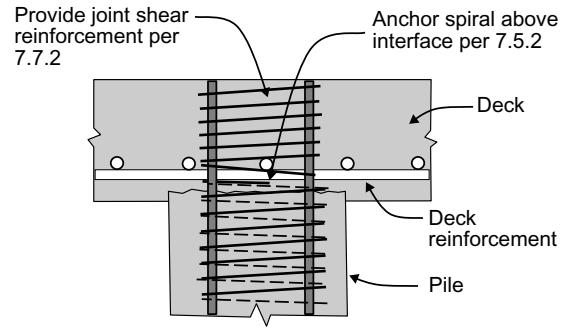

Fig. 7-2. Spiral anchorage for a dowelled connection

7.5.2.2 Deformed and Smooth Spiral Development at the Pile-to-Deck Connection The wire spiral shall be developed at the pile-to-deck connection by extending the spiral at least 1.5 turns above the interface into the deck as shown in Fig. 7-2.

7.6 JOINT SHEAR

7.6.1 General This section provides joint shear requirements. Pile requirements are presented in Section 6.9.3. Shear stresses in the joint shall consider dead load, stresses from shear and bending moment, and the effect of overturning, as presented herein. Connections that are dowel or strand connected to the deck and without full embedment of the piles are considered anchored piles in this section. Fully embedded piles refer exclusively to steel pipe pile and prestressed concrete piles as per Sections 7.4.2.1 and 7.4.3.3, respectively.

7.6.2 Anchored Piles Principal tension and compression stresses shall be calculated for anchored piles as presented in this section.

The principal tension stress, p_t, in the joint is given by

$$p_t = \left(\frac{f_h + f_v}{2}\right) - \sqrt{\left(\frac{f_h - f_v}{2}\right)^2 + v_j^2} \tag{7-5}$$

The principal compression stress, p_c, in the joint is given by

$$p_c = \left(\frac{f_h + f_v}{2}\right) + \sqrt{\left(\frac{f_h - f_v}{2}\right)^2 + v_j^2} \tag{7-6}$$

where f_h = average axial horizontal stress (defined following);
f_v = average axial vertical stress (defined following); and
v_j = average joint shear stress (defined following).

The effective width of the joint, b_{je}, is 1.41D for circular and octagonal piles and 2.0D for square piles. The average joint shear stress v_j is given by

$$v_j = \frac{M_o}{D h_b b_{je}} \tag{7-7}$$

where M_o = overstrength moment;
D = pile diameter or side dimension for square piles;
h_b = depth of the pile cap or deck; and
b_{je} = effective joint width.

The average axial vertical stress f_v is given by

$$f_v = \frac{P_{col}}{b_{je}(D + h_b)} \tag{7-8}$$

where P_{col} = axial load in the pile considering dead load and overturning effects;
b_{je} = effective joint width;
D = pile diameter or side dimension for square piles; and
h_b = depth of the pile cap or deck.

The average axial horizontal stress f_h is given by

$$f_h = P_b / (b_b h_b) \tag{7-9}$$

where P_b = axial load in the beam, including prestress (i.e., pile cap or deck collector);
b_b = width of the pile cap or deck; and
h_b = depth of the pile cap or deck.

7.6.2.1 Allowable Joint Shear Principal tension and compression stresses calculated for anchored piles in accordance with Section 7.6.2 may not exceed the allowable principal tension and compression stresses presented in this section.

The principal tension stress, p_t (kip/in.^{2}), found from Eq. (7-5) is limited as follows:

$$p_t \le \frac{12\sqrt{f'_{ce}}}{1000} \tag{7-10}$$

where f'_{ce} = expected maximum concrete compressive strength (lb/in.^{2}) (metric equivalent not given).

The principal compression stress, p_c, found from Eq. (7-6) is limited as follows:

$$p_c \le \frac{0.25 f'_{ce}}{1000} \tag{7-11}$$

where f'_{ce} = expected maximum concrete compressive strength.

7.6.3 Joint Shear with Fully Embedded Piles The effect of the discontinuity in the joint region caused by pile embedment shall be considered.

7.6.4 Joint Shear in Other Deck Configurations Principal stresses in other deck systems shall be calculated considering the geometry and load path in the connection.

7.7 JOINT DETAILING

7.7.1 General Joint detailing provisions for anchored piles and fully embedded piles are presented in this section. Detailing requirements are based on joint shear stresses calculated in Section 7.6.2. The effect of the discontinuity in the joint region because of pile embedment shall be considered.

7.7.2 Uncracked Joint Detailing For joints with a principal tension stress p_t (kip/in.^{2}) less than the following limit

$$p_t \le \frac{3.5\sqrt{f'_{ce}}}{1000} \tag{7-12}$$

where f'_{ce} = expected maximum concrete compressive strength (lb/in.^{2}).

Note: A metric equivalent is not provided.

Joint shear requirements are satisfied if the connection is detailed according to Fig. 7-3. The following minimum circular volumetric reinforcement ratio shall be provided in the joint region unless indicated otherwise by testing:

$$\rho_s \ge \frac{3.5\sqrt{f'_{ce}}}{1000 f_{yh}} \tag{7-13}$$

where f'_{ce} = expected maximum concrete compressive strength (lb/in.^{2}); and
f_{yh} = nominal yield strength of the transverse reinforcement (kip/in.^{2}).

Note: A metric equivalent is not provided.

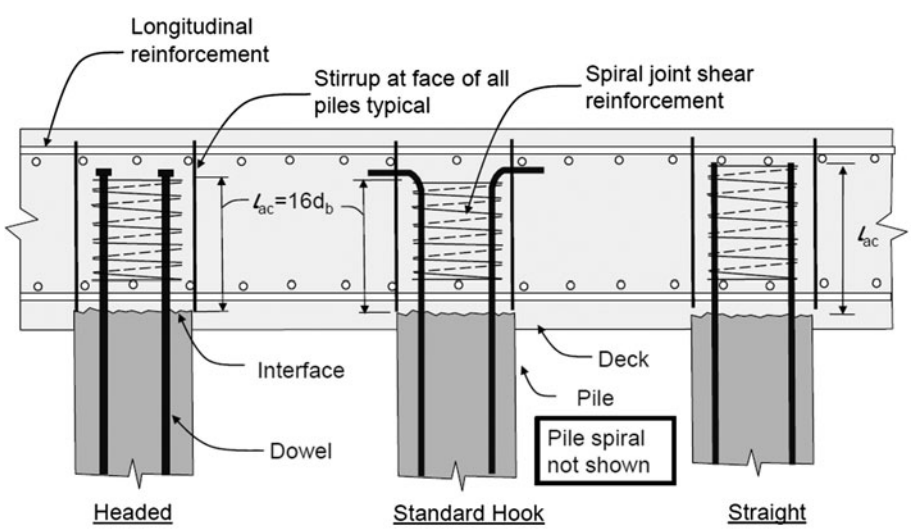

Fig. 7-3. Dowel anchorage for an uncracked joint

7.7.2.1 Minimum Dowel Anchorage for an Uncracked Joint If Eq. (7-12) is satisfied, and stirrups are provided at the face of each pile, dowel anchorage shall be detailed per Eq. (7-14) and Fig. 7-3. Where sleeving is used, the effect of the sleeve on dowel anchorage shall be considered.

$$l_{ac} = \frac{0.025 d_b f_{ye}}{\sqrt{f'_c}} \tag{7-14}$$

where l_{ac} = anchorage length provided for the longitudinal pile reinforcement (in.);
d_b = longitudinal bar diameter (in.);
f_{ye} = expected yield strength of reinforcement (psi); and
f'_c = nominal 28-day concrete compressive strength (psi).
Note: A metric equivalent is not provided.

In addition, when Eq. (7-12) is satisfied, Eqs. (7-15) through (7-19) do not apply, and no additional vertical stirrups at the face of the confined joint zone are required beyond that calculated for the pile cap or deck based on general shear requirements, provided that a stirrup is provided at the face of each pile. Likewise, no additional longitudinal reinforcement is required beyond that which is required to resist calculated bending moments in the pile cap or deck.

7.7.3 Cracked Joint Detailing If Eq. (7-12) is not satisfied, dowel anchorage requirements are satisfied if the joint is detailed per Fig. 7-4. In addition, joint shear requirements are satisfied using Fig. 7-4 by providing adequate confinement. The volumetric ratio of longitudinal dowel reinforcement, ρ, shall be between 1% and 4%. The maximum dowel bar size should be No. 11. The dowels shall be developed into the pile to satisfy Section 7.4.3.4. The pile prestressing strands shall be cut off and removed at the top of the pile.

The effective volumetric ratio, ρ_s, of transverse reinforcement around the pile dowels anchored in the joint shall be the following:

$$\rho_s \geq \frac{0.46 A_{sc}}{D' l_a}\left[\frac{f_{ye}}{f_s}\right] \tag{7-15}$$

where f_s = permitted spiral steel stress, taken as $0.0015E_s$, where E_s is the modulus of elasticity of the transverse reinforcement;
f_{ye} = expected yield strength of the dowels;
l_a = actual embedment length provided;
A_{sc} = total area of dowel bars in the connection; and
D' = diameter of the connection core, measured to the centerline of the spiral confinement.

For joints that do not satisfy Eq. (7-12), additional hoop transverse reinforcement, vertical stirrups, and longitudinal reinforcement are required as follows.

The following minimum circular transverse reinforcement ratio shall be provided in the joint region:

$$\rho_s \geq \frac{0.4 A_{st}}{l_{ac}^2} \tag{7-16}$$

where A_{st} = total area of longitudinal pile reinforcement developed into the deck; and
l_{ac} = anchorage length provided for the longitudinal pile reinforcement.

On each side of the pile face (i.e., confined joint region) subject to bending, vertical stirrups shall be spaced less than 12 in. on center (o.c.) in the deck and within a distance $0.5D$ from the face of the pile such that the following area of vertical transverse reinforcement, A_{sjv}, is provided:

$$A_{sjv} \geq 0.25 A_{st} \tag{7-17}$$

where A_{st} = total area of longitudinal pile reinforcement developed into the deck.

Vertical stirrups shall also be spaced within the joint region to clamp the longitudinal flexural steel in the deck to the joint. The total area of vertical stirrups inside the joint shall be provided as follows:

$$A_{sjj} \geq 0.09 A_{st} \tag{7-18}$$

where A_{st} = total area of longitudinal pile reinforcement developed into the deck.

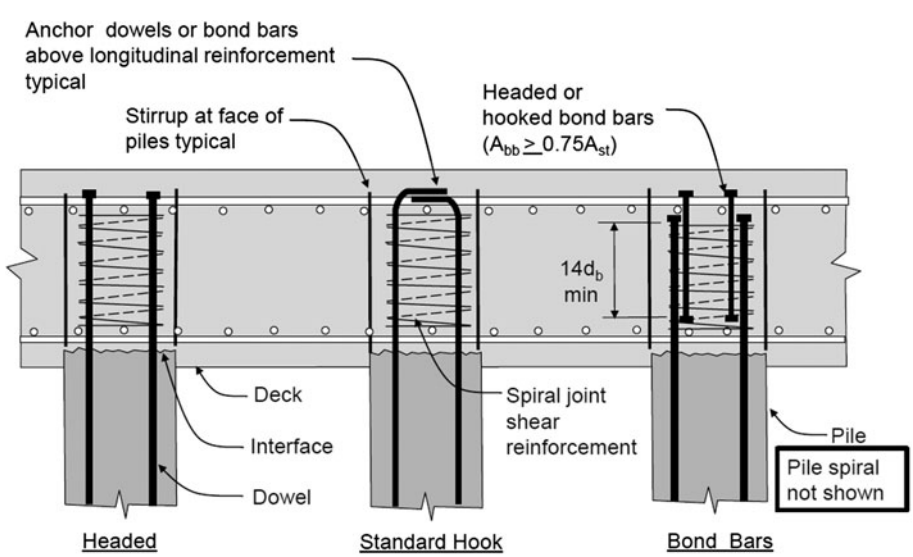

Fig. 7-4. Dowel anchorage for a cracked joint

Additional longitudinal reinforcement beyond that provided to resist bending in the deck or pile cap shall be provided. At the bottom of the deck or pile cap, the following additional area of flexural steel, A_{sjf}, shall be provided and extended or hooked to develop this steel at a location $0.5D$ on each side of the face of the pile:

$$A_{sjf} \geq 0.09 A_{st} \tag{7-19}$$

where A_{st} = total area of longitudinal pile reinforcement developed into the deck.

7.7.4 Fully Embedded Piles Fully embedded steel pipe pile and prestressed concrete pile connections need not be anchored to the deck using dowel extensions or other positive load transfer device unless the pile is required to resist tensile forces. See Section 7.4.3.3 for embedment requirements. See Section 7.6.3 for joint shear. Sufficient reinforcement shall be placed on each side of the embedded pile face to account for joint discontinuity caused by pile embedment and to transfer the pile forces into the deck. This reinforcement shall be extended and anchored a sufficient distance to develop the strength of the joint.

7.7.5 Other Joint Configurations For joint configurations that are not similar in configuration to Figs. 7-3 and 7-4, the effects of deck joints, pile cap configuration, and pile driving tolerances on joint shear and pile anchorage shall be considered. A positive load path shall be provided to transfer forces from the pile through the pile cap and into the deck joint.

Examples of other joint configurations include the following:

a. Slabs supported on cap beams, and
b. Precast deck systems supported on cast-in-place or precast pile caps.

7.7.6 Exterior Joints and Pile Edge Distance Exterior joints must extend a sufficient distance (including driving tolerances) beyond the face of the pile to anchor all joint reinforcement.

7.7.7 Deck Prying and Spalling The use of isolation material around the pile, or chamfering the edge of the pile, or other methods to prevent deck prying and spalling is permitted provided that shear transfer between the pile and the deck is accomplished and the bottom deck reinforcing remains fully protected against corrosion.

7.8 DECKS

7.8.1 General Design provisions for reinforced concrete and precast concrete decks are provided in this section.

7.8.2 Cast-in-Place Concrete Cast-in-place concrete deck systems including flat slab, beam and slab, or other framing systems shall be designed and detailed per ACI 318 (2008).

7.8.3 Precast Concrete Deck Panel Systems Precast concrete deck systems are capacity protected elements and shall be designed and detailed per ACI 318 (2008).

7.8.4 Seismic Joints Where seismic joints are used, they shall be detailed to accommodate the displacements of adjacent structures.

7.8.5 Diaphragms Diaphragms shall be considered capacity-protected elements and shall be designed and detailed per ACI 318 (2008).

7.9 CONSTRUCTABILITY

7.9.1 Pile Driving Tolerances The effect of pile driving tolerances on the seismic performance of the pile-to-deck connection, pile caps, and deck shall be considered.

7.9.2 Pile Cutoffs Allowance shall be made for piles that are not driven the full design amount and need to be cut off when detailing the plastic hinge zones in the piles. Spiral shall be developed at the end of the pile per Section 7.5.2.

7.9.3 Pile Buildups Allowance shall be made for piles that are driven deeper than the design amount and need to be extended when detailing the plastic hinge zones in the piles. Spiral and dowel bar laps shall be detailed to provide the same strength and ductility as the adjacent pile.

7.9.4 Pile Cap Tab-outs Pile cap tab-outs are field modifications required when the pile is driven out of tolerance, will not fit in the pile cap or deck beam, and is not redriven. The pile cap tab-outs shall be designed and detailed to transfer the pile overstrength forces to the deck, or the pile shall be hinged, or a partial moment connection shall be provided at the top to minimize pile overstrength forces provided that the effect of the reduced connection capacity on the overall seismic performance of the structure is considered.

7.10 REFERENCES

American Concrete Institute (ACI). (2008). *Building code requirements for structural concrete* (ACI 318-08) and commentary (ACI 318R-08), American Concrete Institute, Farmington Hills, MI.

This page intentionally left blank

CHAPTER 8
ANCILLARY COMPONENTS

8.1 INTRODUCTION

8.1.1 Scope This chapter presents design requirements and methods to analyze and design ancillary components of pier and wharf structures.

8.2 DEFINITIONS

The following definitions apply only to the provisions of Chapter 8:

ANCILLARY COMPONENTS: Components of a pier or wharf that do not contribute to the strength or stiffness of the structure.

MARINE LOADING ARM: Arm that connects shore and vessel piping (vessel's manifold) to permit the loading or unloading of petroleum product.

8.3 SYMBOLS AND NOTATION

The following symbols and notation apply to the provisions of Chapter 8:

μ_s Static coefficient of friction

8.4 GENERAL DESIGN REQUIREMENTS

Unless otherwise noted in Section 8.5, the following criteria apply.

8.4.1 Design Criteria Ancillary components shall be designed in accordance with ASCE 7 (2005) and the requirements of this standard. Where differences occur, the requirements of this standard take precedence over those of ASCE 7 (2005).

8.4.2 Component Mass The mass of ancillary components shall be considered in the pier or wharf seismic design in accordance with Chapter 3.

8.4.3 Dynamic Response If the dynamic response of the ancillary component is significant to the pier or wharf response, its effect shall be included in the design of the pier or wharf structure.

8.4.4 Component Interaction If the performance of a component adversely affects the performance of another component, that component shall be designed so that the performance requirements of both components are met.

8.4.5 Design Motions Component design shall be based on the motion at the component support location.

8.4.6 Relative Movements The relative movements between components and their support structures shall be considered.

Table 8-1. Coefficient of Static Friction for Pipelines

Sliding surface	μ_s
Teflon™ on Teflon™	0.10
Plastic on steel	0.35
Steel on steel	0.40
Steel on concrete	0.45
Steel on timber	0.49

8.5 COMPONENT-SPECIFIC DESIGN REQUIREMENTS

The criteria and considerations in this section take precedence over the general criteria of Section 8.4.

8.5.1 Pipelines

8.5.1.1 General Pipelines shall be designed in accordance with ASME B31E (2008).

8.5.1.2 Design of Pipe Supports For determining forces on bearing surfaces (pipeline supports), the coefficients of static friction μ_s provided in Table 8-1 shall be used.

8.5.2 Container Cranes

8.5.2.1 Seismic Mass The container crane mass does not need to be considered in the wharf seismic analysis provided that either of the following is true:

a. The crane period is at least twice the wharf period in the direction considered; or
b. The crane mass at and below the crane portal beams is less than 5% of the tributary wharf mass.

The tributary wharf mass is based on the following:

a. Wharf length per crane equal to the length of the wharf divided by the number of cranes or 300 ft (91.44 m), whichever is less, and
b. Mass of the wharf deck system and 1/3 of the pile distance from the deck to a point 5 pile diameters below the mudline.

When the crane mass must be considered, the crane lateral load on the wharf is the smallest load calculated using a spectral analysis, a time history analysis, or the lateral load for the crane to tip and lift from the rails. The methods permitted for calculating the crane lateral load to the wharf depend on the following conditions:

a. If the total crane mass is equal to or less than 20% of the tributary wharf mass, then the crane lateral loading can be calculated using the response spectrum at the wharf deck surface, a time history analysis, or the lateral load to tip the crane.
b. If the total crane mass is greater than 20% of the tributary wharf mass, the crane lateral loading shall be calculated based on a time history analysis or the lateral load to tip the crane.

8.5.2.2 Crane Performance Container cranes shall be designed to the performance requirements of Chapter 2. It is permitted to use a different design classification for the crane than for the structure supporting the crane.

8.5.2.3 Crane Rail System The relative displacement of the rail at expansion joints shall be considered.

Displacement of the rail support structure shall be considered in the design of the vertical rail support and in maintaining the rail gauge. When the design classification for the crane is high, the crane rail supports shall be designed so that the rail gauge does not change during the operating level earthquake (OLE) and changes less than 0.5 in. (0.0127 m) during the contingency level earthquake (CLE).

8.5.2.4 Conductor Bar and Power Cable Trenches The relative displacement of the rail trench at expansion joints shall be considered.

8.5.3 Marine Loading Arms

8.5.3.1 Introduction Marine loading arms shall be designed for both stored, non-operating positions and fully operational positions in accordance with this section. Noncritical and critical components shall be designed considering marine loading arms in a stored, non-operating position in accordance with Section 8.5.3.2. Additionally, critical components shall be designed considering marine loading arms in a fully operational position in accordance with Section 8.5.3.3.

8.5.3.2 Non-operating Position Marine loading arms in a stored, non-operating position shall be structurally and mechanically designed in accordance with *Design and Construction Specification for Marine Loading Arms* (OCIMF 1999), which is maintained and published by the Oil Companies International Marine Forum. The earthquake analysis shall consider loads in the plane perpendicular and parallel to the pier or wharf face. Vertical seismic load effects shall also be considered.

8.5.3.3 Fully Operational Position Marine loading arms in a fully operational position shall be structurally and mechanically designed in accordance with ASME B31.3 (1998) and Sections 8.5.3.3.1 through 8.5.3.3.3.

8.5.3.3.1 Load Combinations When considering the performance objectives of Section 8.5.3.3.2, design loads shall consider the full effects of dead, fluid, and thermal loads in combination with the OLE, CLE, and design earthquake (DE) events.

8.5.3.3.2 Performance Objectives Arm components shall be undamaged after the applicable OLE and/or CLE event, and the arm shall not collapse or rupture during the DE event.

8.5.3.3.3 Acceptance Criteria The acceptance criteria in Sections 8.5.3.3.3.1 and 8.5.3.3.3.2 shall be satisfied.

8.5.3.3.3.1 Structural Steel Support Members Structural steel support members shall be designed and detailed in accordance with American Institute of Steel Construction (ANSI/AISC 2010).

8.5.3.3.3.2 Swivel Joints and Mechanical Couplers Swivel joints and mechanical couplers shall be tested to demonstrate that OCIMF static test loads exceed loads caused by seismic demand and achieve applicable performance levels as specified in Section 8.5.3.3.2.

8.6 REFERENCES

American National Standards Institute/American Institute of Steel Construction (ANSI/AISC). (2010). *Specification for structural steel buildings,* ANSI/AISC 360-10. American National Standards Institute/American Institute of Steel Construction, Chicago.

American Society of Civil Engineers (ASCE). (2005). *Minimum design loads for buildings and other structures*, ASCE 7-05, American Society of Civil Engineers, Reston, VA.

American Society of Mechanical Engineers (ASME). (1998). *Process piping,* B31.3, American Society of Mechanical Engineers, New York.

American Society of Mechanical Engineers (ASME). (2008). Standard for the Seismic Design and Retrofit of Above-Ground Piping Systems, B31E, American Society of Mechanical Engineers, New York.

Oil Companies International Marine Forum (OCIMF). (1999). *Design and construction specification for marine loading arms*, 3rd Ed., Witherby, London.

CHAPTER C1
GENERAL

C1.1 INTRODUCTION

C1.1.1 Purpose This standard provides minimum requirements for the seismic design of pile-supported piers and wharves. The provisions were developed in a manner that was intended to encourage the use of displacement-based design methods, which have become commonly used in the ports and terminal industries for many years. However, it is also recognized that force-based methods are generally easier to use and may be required by the authority having jurisdiction. Therefore, provisions and limitations are also provided that are expected to provide reasonable life safety assurance when using force-based methods.

C1.1.2 Scope and Limitations This standard is intended to address the important aspects of seismic design of piers and wharves supported on concrete or steel piles. Note that it is not intended to prevent the use of other materials, such as timber or fiber-reinforced polymers (FRPs). A primary focus of this document is to cover those types of structures not addressed by ASCE 7 (2005), specifically those that are not accessible to the general public. Those structures are typically commercial or industrial ports and are most likely constructed of steel and concrete.

This standard does not address marine structures that are covered by other standards or design practices, such as offshore platforms or liquefied natural gas terminals.

This standard is limited to piers and wharves without public access to avoid potential conflicts with ASCE 7 (2005), which specifically covers only piers and wharves with public access, such as cruise terminals, retail, or entertainment venues. Although ASCE 7 and this document address different structures, the committee has selected to use portions of ASCE 7 (2005) by reference in this document. It should be noted that the committee has specifically decided to use ASCE 7-05, although ASCE 7-10 (2010) is a more recent edition and has been published by ASCE. The reason for this decision is that ASCE 7-10 has adopted significant changes from ASCE 7-05, especially in the definition of ground motions, and at the time of writing of this standard, ASCE 7-10 had not been adopted for use by any regulatory authorities and had not been used for design of marine structures. Thus, the committee decided that it would be appropriate to reference the version of the document currently being used, rather than the newer edition.

When a building is built on a pier or wharf, the design of the building typically falls under the auspices of ASCE 7 (2005) or another model building code, as determined by the authority having jurisdiction. The pier or wharf structure may be modeled in a coupled manner with the building or isolated as a separate structure. This standard may still be useful for assessing and understanding the performance of the pier or wharf structure, although it may not be accepted by the building official for the complete design.

It should be noted that although seismic loading (i.e., ground motions) prescribed for design by ASCE 7 (2005) is referenced for use in this document, the overall methods of ASCE 7 (2005) were developed for buildings and are not directly applicable for the performance-based design methodologies that have been adopted for piers and wharves by most major ports in the United States. Current building codes and seismic design provisions typically refer to ground motions associated with a design earthquake (DE) and/or maximum considered earthquake (MCE), and the design is performed for a single-level event. The seismic performance at any other level of seismic loading can only be implied. This fact highlights the significant difference between current building codes and the multilevel seismic design that is commonly applied for waterfront structures at commercial ports and harbor facilities.

This standard also does not specifically address "closed wharves," constructed, for example, of sheet pile structures (anchored bulkheads, cellular bulkheads) or concrete caissons. Again, this omission is not intended to discourage or prevent the use of these elements or this type of design. Rather, it was believed that to appropriately include these elements within the scope of this document would require significant additional resources and effort beyond the means of this standards committee. It is hoped that the design of these elements can be added in future editions of this standard.

Note that in general, the document does not cover all possible applications, conditions, or materials that may be used in the design of a pier or wharf. The intent is not to prohibit a specific practice unless specifically stated as such.

The performance-based methods of seismic design necessitate close interaction between geotechnical and structural engineers because the global response of the wharf or pier is largely governed by complex soil–structure interaction. The degree to which soil–structure interaction governs design is a function of the regional seismic hazard, geologic conditions in the marine environment, and the configuration of the wharf-foundation–embankment system. These complexities pose potential challenges that are not routinely faced in standard building design; thus, there is a need for close collaboration between specialties and the development of this ports industry-specific seismic standard. As such, this document has been written for use by qualified geotechnical and structural engineers with experience working in the marine environment and familiar with the specific design issues faced by this industry.

C1.2 DEFINITIONS

The definitions of pier and wharf provided in this section are used throughout the document. In reality, a pier or wharf may consist of any number of independent structures, and various

terminologies are used for pier and wharf structures. For example, the following definitions describe several variations of wharf structures.

ISLAND WHARF: An island wharf consists of a pile-supported platform located some distance away from shore and is not connected to shore by a pier structure. The wharf is relatively short and is accessible only by boat. Mooring dolphins are typically provided beyond the ends of the wharf and are typically connected to the wharf by pile-supported catwalks.

L-SHAPED WHARF: An L-shaped wharf is located some distance away from shore and is accessed from land by a single pile-supported pier connected to one end of the platform to create the L shape. This configuration can be designed to accommodate vessels on both sides of the wharf.

MARGINAL WHARF: A marginal wharf is attached to the shore along its full length, and a retaining structure may be used to retain earth and/or stone placed behind the wharf. With this configuration, the vessels can berth along the outboard face only.

T-SHAPED WHARF: A T-shaped wharf is located some distance away from shore, where water depths are deep enough to accommodate vessels. Access to the wharf from land is provided by a pile-supported pier extending from shore to near its midpoint to form the T-shape. The wharf can be designed to accommodate vessels on both sides of the wharf.

U-SHAPED WHARF: A U-shaped wharf is located some distance away from shore and is accessed from land by two pile-supported piers, one connected to each end to create the U-shape. The wharf can accommodate vessels on its outboard side only.

C1.5 REFERENCES

American Society of Civil Engineers (ASCE). (2005). *Minimum design loads for buildings and other structures*, ASCE 7-05, American Society of Civil Engineers, Reston, VA.

CHAPTER C2
SEISMIC PERFORMANCE REQUIREMENTS

C2.1 INTRODUCTION

C2.1.1 Scope This standard applies to the seismic design of pier and wharf structures at seaports and inland waterways. It is based on a performance-based design procedure that uses a displacement approach, with three levels of design seismic hazards, in order to achieve the seismic performance requirements that are prescribed in this chapter. These requirements, which reflect the importance (i.e., design classification) of the pier or wharf structure being designed, consist of specified performance levels to be maintained at each of the various seismic hazard levels considered in this standard.

Performance-based design concepts, with specific performance requirements at multiple levels of seismic loading, have been adopted for marine structures for many years. Offshore platforms have been designed for multiple levels of loading since the 1970s. Common practice in high seismic areas since the mid-1980s has been to use performance-based design principles with multiple seismic load levels (i.e., earthquake levels) and different performance objectives for each level. This approach is consistent with current practice for seismic design of piers and wharves at major ports along the West Coast of the United States and is intended to allow the engineer to design for life safety while considering economic aspects of seismic performance and recovery of operations, significant considerations that are paramount to the port industry. There has also been an international trend in the development of performance-based design standards for ports and harbors (e.g., PIANC 2001). Current model building codes, such as ASCE 7 (2005), have not been developed for this purpose and do not address the unique seismic response (e.g., strong beam–weak column, structure on sloping ground, and pile hinging) and business-continuity aspects of seismic performance that must be considered when designing pier and wharf structures. As a result, the ports industry has devoted significant effort and expertise toward the development and application of performance-based methods that are appropriate for these structures. This standard builds on these methods and provides them in a form that can be readily applied to the seismic design of piers and wharves.

The current seismic design practice for piers and wharves differs from that used for conventional buildings or building-like structures. For example, load combinations used in pier and wharf design must include berthing and mooring loads that may govern the lateral load design in low seismic regions. In addition, experience has shown that geotechnical hazards are a prime consideration in the seismic design of pier and wharf structures (ASCE–TCLEE 1998), which are often constructed on slopes at sites with hydraulic fills and weak foundation soils that may be prone to liquefaction, lateral spreading, and/or slope instability during an earthquake. Finally, because the configurations and construction procedures for pier and wharf structures are substantially different from those for buildings, seismic response characteristics likewise differ. This difference underscores the need for the unique seismic design procedures for pier and wharf structures that are provided in this standard.

C2.2 DESIGN CLASSIFICATIONS

A design classification is assigned to a structure by the authority having jurisdiction. However, in many cases, the port owner may effectively act as the authority having jurisdiction. The owner acting as authority having jurisdiction may want to assess the relative economic risks and costs associated with assigning a design classification to a given structure. Considerations may include overall portwide cargo handling capacity and operations after a major earthquake. For some pier and wharf structures, port decision makers may wish to obtain additional seismic performance information, such as the potential for prolonged downtime for structures that are essential to the region's post-earthquake emergency response, or the potential for extensive business interruption losses for structures that are important or essential to the port and stakeholder business interests. General approaches for risk assessment are presented in the literature and can be used to assess a wide variety of other risk-reduction options (e.g., various seismic-retrofit strategies for existing structures, emergency response planning options, or insurance or financial options) (Werner et al. 2002; Wittkop and Jensen 2002; Pachakis and Kiremidjian 2004).

C2.3 DESIGN CRITERIA

Design earthquake (DE) hazard levels are intended to be consistent with applicable local building codes for ordinary structures. This seismic hazard level is considered in the design to ensure that, as a minimum, the criteria for seismic design of piers and wharves are no less stringent than the minimum standards considered for ordinary buildings. Those standards have been developed and promulgated through the Building Seismic Safety Council and published in the *NEHRP Recommended Provisions* (BSSC 2004a) and Commentary (BSSC 2004b). The seismic provisions of ASCE 7 (2005) are based in large part on the material developed by NEHRP. In fact, many members of the ASCE 7 Seismic Task Committee are also members of the parallel BSSC committee, specifically to ensure coordination of these two groups and these two documents. In particular, it is intended that the seismic hazard level for the design earthquake remain consistent with that considered for life safety in conventional building codes. This expectation is discussed in more detail in Section 1.1.1 of the NEHRP Commentary (BSSC 2004b). That Commentary states specifically that the intent of the *NEHRP Recommended Provisions* is to provide reasonable and prudent

life safety. Although there is an expectation of damage limitations when using those provisions, the stated intent is specifically life safety. In this standard, the DE is also intended to address life safety in a manner consistent with NEHRP (BSSC 2004a) and ASCE 7 (2005).

Design criteria similar to those described in Table 2-1 of this standard have been used in the ports industry for many years. By the mid-1980s, probabilistic seismic hazard analyses (PSHAs) were becoming more common, allowing the industry the ability to introduce the concepts of performance-based design practices. These typically took the form of a two-level earthquake design, with a performance expectation of little or no damage for a small to moderate earthquake and no collapse in a major earthquake.

As an example, calculations for a 1985 wharf design at the Port of Oakland present seismic criteria that are based on "AASHTO Specifications with Caltrans Modifications." In this case, the two levels were as follows:

a. Level 1: 20% probability of exceedance in 50 years (240-year return period) and
b. Level 2: 50% probability of exceedance in 50 years (72-year return period).

These two earthquake levels resulted in site response spectra with peak ground accelerations (PGAs) of 0.35 g and 0.25 g, respectively.

Of note is the method used to determine the factored seismic base shear used in design. For the Level 1 earthquake, a damping value of 7% was used, and the spectral acceleration was divided by a risk factor of 8. For the Level 2 earthquake, a damping value of 5% was used, and the spectral acceleration was divided by a risk factor of 4 to represent the ductility of the pile wharf system before spalling of concrete. The net result was that the Level 2 earthquake governed the design, even though the PGA is smaller.

The comparison of seismic load levels and performance objectives prescribed for buildings and for port structures has been made many times within the port engineering community. For example, the 1985 wharf design described above was also compared to the building criteria in the 1985 Uniform Building Code (UBC). The base shear equation at the time was

$$V = ZIKCSW \qquad \text{(C2-1)}$$

where Z = zone factor (1.0 for the highest zone: Zone 4);
I = importance factor = 1.0;
K = factor for building type = 0.67 for a ductile moment-resisting frame;
CS = coefficients where the maximum product of CS need not exceed 0.14; and
W = weight of the structure.

The resultant base shear, expressed as an ultimate load by applying a 1.4 factor = 0.13 W. In this case, the smaller Level 2 earthquake specified by the Port of Oakland at the time resulted in the same design base shear as the 1985 UBC.

Performance-based design with multiple earthquake levels and performance criteria has become accepted practice internationally in the marine industry. Table T1.1 of PIANC (2001) summarizes the practices of several international authorities, including Japan, New Zealand, Europe (Eurocode), and the U.S. Navy. All specify at least a dual-level design. PIANC's guidelines include two levels of earthquake and four levels of performance criteria, depending on the importance of the structure. The design approach considered in this standard is based on performance levels corresponding to life safety protection, controlled and repairable damage, and minimal damage that are defined in this section. Strain limits associated with each of these performance levels are prescribed in Section 3.9 of this standard.

C2.4 PERFORMANCE LEVELS

Fig. C2-1 illustrates damage states at the top of a prestressed concrete pile corresponding to the performance levels defined in Sections 2.4.1 through 2.4.3.

C2.4.1 Life Safety Protection Protection of life safety is a minimum performance requirement that must be met by all pier and wharf structures designed in accordance with this standard. Although this document references ASCE 7 (2005), experience has shown that life safety risks have not been common at pier and wharf structures during past earthquakes, even when these structures have been severely damaged. This level of safety is due primarily to the high redundancy of the pile supports throughout these structures, which substantially reduces the probability of total collapse.

Minimal Damage OLE	Controlled and Repairable Damage CLE	Life Safety Protection DE
		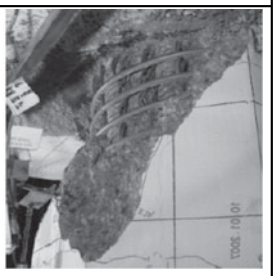
Initial cracking and spalling of the pile and/or deck	Substantial spalling of the pile and the deck in the vicinity of the pile thereby exposing reinforcement in the pile and the deck	Broken connection from either spalling into the core, fractured dowel bars or buckled strand.

Fig. C2-1. Photos of damage states corresponding to performance levels

For piers and wharves without public access, other factors contributing to the relatively low life safety risks for these structures include the following:

a. The occupancy of these structures is typically low because of the need for relatively few working personnel during cargo loading and unloading operations.
b. Pier and wharf structures are typically located in open areas that do not contain enclosed structures that could collapse onto personnel. Those structures that may be located on piers and wharves are typically low profile, have intermittent or low occupancies, and do not typically pose major risks to life safety during an earthquake.

This standard does not specify the loss of materials that would pose a hazard to the public, because it is assumed that the authority having jurisdiction would define quantities and materials. As an example, MOTEMS (California State Lands Commission 2010) uses prevention of a major spill (≥1,200 barrels) as a performance level criterion for the design of marine oil terminals.

C2.4.2 Controlled and Repairable Damage Structures designed to this performance level may experience damage to an extent that is controlled and repairable. It is important to recognize that actual repair times and costs of pier and wharf structures designed to meet this performance level depend on factors outside of the seismic design procedures that are deployed. Such factors include the following:

a. *Pre-earthquake planning of repair resources*. The availability of repair resources (equipment, materials, and labor) that can be rapidly mobilized after an earthquake can substantially reduce recovery times and economic losses caused by earthquake damage. Pre-earthquake planning that establishes resources that are dedicated to repair and reconstruction at the port can be beneficial for reducing post-earthquake downtimes and business interruption losses. Another important consideration is how to prepare for and repair the damage to the structure that may occur when subjected to contingency level earthquake (CLE) ground motion levels that are defined in Section 2.3. One way to accomplish this during the design process is to develop design criteria for typical repairs and to also develop detailed designs for select repairs that would be expected after an earthquake. These efforts would enable the design of the actual needed repairs to proceed immediately after the earthquake, after which construction associated with these repairs can begin. These steps would help to reduce pier and wharf downtimes, along with the associated economic losses caused by the interruption of shipping operations (Serventi et al. 2004).
b. *Port location*. Given two ports experiencing an equivalent extent of damage, recovery times may be shortened if the port is located in a temperate industrialized area with a skilled and well-equipped workforce, rather than in a remote northern climate where repair resources are scarce and weather-related repair delays could result. Thus, pre-earthquake repair-resource planning is particularly important for ports in these more remote areas.
c. *Earthquake size*. If a major earthquake occurs and causes widespread damage throughout a region's infrastructure, there could be a temporary shortage of resources for repair of this widespread damage. Roads and bridges needed to deliver resources to the site may also be down. This problem could increase post-earthquake recovery times at a port within the affected region and should be considered during a port's pre-earthquake repair-resource planning.

C2.4.3 Minimal Damage It is recognized that most structures cannot be designed to prohibit all damage, even when these structures are subjected to moderate seismic hazards with a high likelihood of occurrence during the life of the structure. However, it is possible and necessary for important structures to limit such damage to small or minimal levels, which in turn, will result in little or no disruption of cargo handling operations when these structures are subjected to moderate seismic hazards.

The onset of this minimal-damage-performance level is defined in terms of strain limits in Section 3.9 of this standard. Testing and experience have shown that these limit-state values provide a high likelihood of achieving this seismic performance level.

C2.5 SEISMIC HAZARDS TO BE CONSIDERED

Experience has shown that port facilities are vulnerable to multiple geologic hazards associated with moderate to strong ground shaking (ASCE–TCLEE 1998). These hazards include cyclic strength loss of soils (liquefaction and cyclic degradation), ground failures, post-cyclic loading ground settlement, and, in special circumstances, fault rupture.

In view of these various geologic hazards, this standard requires that, in addition to ground shaking hazards, the potential for corresponding hazards associated with cyclic strength loss of soils, slope movement, and surface fault rupture should be evaluated in accordance with procedures outlined in Chapter 4. If such hazards are determined to be present at the site, they must be considered in the seismic design of the structure as described in Chapter 3 of this standard. It should be noted that whereas current building codes typically assume that hazards, such as liquefaction, are mitigated through ground improvements, this standard recognizes that at port facilities, where weak soils are often prevalent, it may not be economically feasible to mitigate these hazards, and sites with more suitable soil conditions may not be available. As such, provisions are given for evaluating the consequences of kinematic loading on piles caused by permanent ground movement in an earthquake and for ensuring that the structure can perform as required even if those ground movements do occur.

C2.6 REFERENCES

American Society of Civil Engineers–Technical Council for Lifeline Earthquake Engineering (ASCE–TCLEE). (1998). *Seismic guidelines for ports*, S. D. Werner, ed., TCLEE Monograph No. 12, American Society of Civil Engineers, Reston, VA.

American Society of Civil Engineers (ASCE). (2005). *Minimum design loads for buildings and other structures*, ASCE 7-05, American Society of Civil Engineers, Reston, VA.

Building Seismic Safety Council (BSSC). (2004a). *NEHRP recommended provisions for seismic regulations for new buildings and other structures*, 2003 Ed., Part 1: Provisions, FEMA 450-1, Building Seismic Safety Council, Washington, DC.

Building Seismic Safety Council (BSSC). (2004b). *NEHRP recommended provisions for seismic regulations for new buildings and other structures*, 2003 Ed., Part 2: Commentary, FEMA 450-2, Building Seismic Safety Council, Washington, DC.

California State Lands Commission. (2010). *California code of regulations*, Part 2, California Building Code, Chapter 31F, Title 24, commonly referred to as the Marine Oil Terminal Engineering and Maintenance Standards (MOTEMS) California State Lands Commission, Sacramento, CA.

Pachakis, D., and Kiremidjian, A. S. (2004). "Estimation of downtime-related revenue losses in seaports following scenario earthquakes." *Earthquake Spectra*, 20(2), 427–449.

PIANC. (2001). *Seismic design guidelines for port structures*, A.A. Balkema Publishers, Exton, PA.

Serventi, G. M., Jordan, M. A., Fotinos, G., and Soderberg, E. G. (2004). *The design of earthquake damage repairs before the earthquake occurs*,

Proceedings of Ports 2004 Conference, Houston, TX, May 23–26, American Society of Civil Engineers, Reston, VA.

Werner, S. D., Taylor, C. E., Dahlgren, T., Lobedan, F., LaBasco, T. R., and Ogunfunmi, K. (2002). *Seismic risk analysis of port of Oakland container berths*, Proceedings of Seventh U.S. Conference on Earthquake Engineering, Boston, MA, July 21–25, Earthquake Engineering Research Institute, Oakland, CA.

Wittkop, R., and Jensen, B. (2002). *Communicating acceptable risk analysis: An owner/engineer's perspective, acceptable risk processes, lifelines and natural hazards*, C. E. Taylor and E. VanMarcke, eds., CDR and TCLEE Monograph No. 21, American Society of Civil Engineers, Reston, VA, 187–196.

CHAPTER C3
DESIGN APPROACH

C3.4 OVERALL APPROACH AND ORGANIZATION OF THIS STANDARD

This section describes the individual steps required for the analysis and seismic design of a pile-supported pier or wharf structure. All of these steps presume that an initial design and member sizing has been performed for static and service loads before beginning seismic design.

This step-by-step listing is intended to be a road map for the designer to ensure that all of the applicable portions of the standard have been addressed and satisfied. The approach used in these steps is based on the premise that the structure has already been designed for static and service loads before design for seismic loads.

Steps d through f are likely to be performed by the geotechnical engineer in coordination with the structural engineer.

C3.5 DETERMINATION OF ANALYSIS AND DESIGN METHOD

This standard has been developed with the intent of allowing both displacement-based and force-based approaches to be used for seismic design. Although displacement-based methods are always considered to be acceptable, it is also recognized that seismic considerations do not always govern design, and, thus, the historically more standard and less intensive force-based approach is still allowed under specific conditions.

C3.7 GENERAL MODELING CONSIDERATIONS

C3.7.3 Seismic Mass The seismic mass includes the wharf deck, the upper portions of piles close proximity the deck, and an appropriate percentage of live load on the deck. One simplification commonly used is to include one third of the mass of the pile located between the deck soffit and a distance of five pile diameters below the soil as effective mass. This additional mass is typically lumped at the centerline of the deck.

C3.9 STRAIN LIMITS

Several groups have adopted strain limits for various earthquake levels, including the Port of Los Angeles (POLA 2010), Port of Long Beach (POLB 2012), and California State Lands Commission (2010). Strain limits have been developed through full-scale test programs supplemented with numerical analyses. The tests included displacement of full-size frames in excess of theoretical demands as described in this document. The strain limits provided in Section 3.9 are primarily from the Port of Long Beach *Wharf Design Criteria* (2012) and the Port of Los Angeles seismic code (2010).

C3.10 DESIGN EARTHQUAKE STABILITY CHECK

Tests of dowelled pile-to-deck connections have shown that dowel bars may fracture when the strain exceeds 0.06. Since the design earthquake (DE) strain limit is 0.08, there is a possibility that some of the dowel bars may fracture even though calculations indicate that the strains are acceptable in the DE. The fracture of outer bars in a connection reduces the moment capacity and the global overturning resistance of the structure. Pinning the pile-to-deck connections that may have fractured conservatively accounts for this reduction in overturning resistance in the P-delta check.

For those connections not listed in Table 3-3 (i.e., those without specified strain limits), the engineer might consider pinning the tops of piles with high rotation demand for the DE stability check to account for the possibility of fractured reinforcement.

C3.11 BATTER PILES

Historically, battered piles have not performed well in earthquakes where moderate to large ground deformations have been experienced. Additionally, they are also susceptible to damage because of static loading caused by settling soils. The use of batter piles is permitted in this standard provided that the structure satisfies all force, displacement, and compatibility requirements caused by seismic loading, which can only be accomplished using a displacement-based design approach.

Most of the poor performance associated with batter piles is attributed to the following: (1) force-based design, (2) poor detailing, and (3) a lack of understanding of the postyield kinematics. The use of displacement-based design procedures provides the engineer with a significantly better tool than force-based design to analyze and design batter piles. Therefore, the use of force-based design of batter piles is prohibited in this standard unless the structure is designed to be elastic during the DE.

If inelastic seismic behavior is allowed, generally four options are available for batter piles:

a. Deck hinging,
b. Pile plunging or buckling,
c. Tension pile pullout, and
d. Yielding of the pile-to-deck connection.

However, the deck is capacity protected, so deck hinging is prohibited. Pile plunging is impractical because the axial capacity of a driven pile in compression is usually more than the uplift capacity and would therefore be an unlikely failure mechanism for most pile-supported structures. Buckling is not practical, and slippage between the piles and the soil is usually not a reliable mechanism for energy dissipation, because the normal variation

in driven pile capacities would require pile overstrength factors that would be too large to be practical for most applications.

Therefore, yielding of the tension connection is the most reliable location for inelastic behavior in batter piles. One method to achieve the strain demands is to debond the connection dowels by sleeving, which allows the tension pile to elongate relative to the compression pile, causing the deck to "pole vault" about the compression pile; this situation may impose large compatibility demands on the deck, depending on the level of restraint provided by plumb piles and adjacent batter piles (California State Lands Commission 2010; Harn 2004) as illustrated in Figs. C3-1 and C3-2.

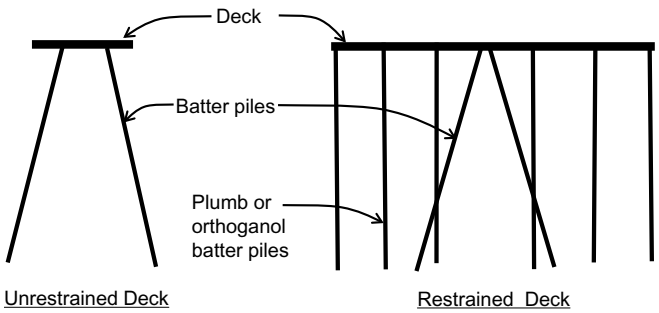

Fig. C3.1. Example piers with batter piles

Fig. C3-1 shows two pier structures with batter piles. The deck on the left is unrestrained from vertical displacement, and the one on the right is restrained by plumb piles. Fig. C3-2 shows the displaced shapes under seismic loading. The moments and shears for the unrestrained deck are limited by the tension pile-to-deck connection. The "pole vaulting" motion creates large compatibility forces in the deck and piles, which can be managed by appropriate pile layout and framing. Fused batter piles are usually not appropriate for marginal wharves or piers with short piles because of large pile moments.

C3.13 REFERENCES

California State Lands Commission. (2010). *California code of regulations*, Part 2, California Building Code, Chapter 31F, Title 24, , commonly referred to as the Marine Oil Terminal Engineering and Maintenance Standards (MOTEMS), California State Lands Commission, Sacramento, CA.

Harn, R. E. (2004). *Displacement design of marine structures on batter piles*, 13th World Conference on Earthquake Engineering, Paper No. 543, Vancouver, BC, August, Indian Institute of Technology Kanpur, Kalyanpur, India.

Port of Long Beach (POLB). (2012). *Wharf design criteria*, Version 3.0, February 29, Port of Long Beach, Long Beach, CA.

Port of Los Angeles (POLA). (2010). *Code for seismic design, repair, and upgrade of container wharves*, Port of Los Angeles, Los Angeles, CA.

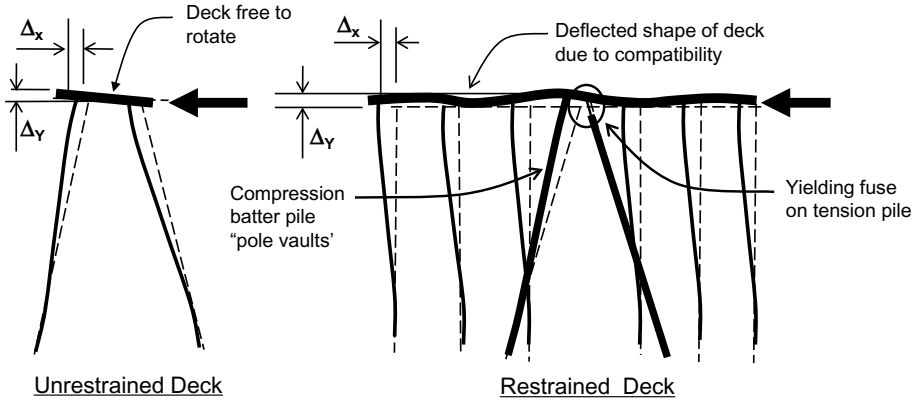

Fig. C3.2. The effects of inelastic vertical displacements

CHAPTER C4
GEOTECHNICAL CONSIDERATIONS AND SOIL–STRUCTURE INTERACTION

C4.1 INTRODUCTION

C4.1.1 Scope The purpose of this section is to provide general guidelines related to the various geotechnical evaluations required in the provisions. The complexity of phenomena associated with seismically induced ground failures and soil–structure interaction has necessitated the reliance on largely empirically based evaluation procedures, which are continually updated as more field performance data are collected. Therefore, the most current methodologies that are considered acceptable standards of practice in the industry should be used in the seismic performance evaluations. It is assumed that the geotechnical evaluations outlined in this document are based on adequate site characterization, incorporating site-specific geologic, geophysical, and geotechnical investigation techniques (as applicable) to ascertain the horizontal and vertical extent of soil and rock units. Particular attention should be given during the field exploration to the presence of continuous layers of weak soil that could affect the static stability of slopes and earth structures (e.g., dredged channel slopes, dikes, and breakwaters) and which may be prone to strength loss during seismic loading. It is beyond the scope of this document to provide guidelines for adequate site characterization, and it is left up to the project geotechnical engineer to obtain adequate subsurface data using local accepted practice to develop geotechnical parameters that are appropriate for the project.

C4.3 EARTHQUAKE GROUND MOTIONS

The horizontal ground shaking corresponding to the operating level earthquake (OLE) and the contingency level earthquake (CLE) identified in Section 2.3 should be developed based on probabilistic seismic hazard analyses (PSHAs) that incorporate several ground motion attenuation relationships appropriate for the style(s) of faulting of sources in the region because of the large degree of variation (or uncertainty) in the observed ground shaking in the strong motion database. The PSHA should be used to first develop uniform hazard spectra (UHS) for bedrocklike conditions (i.e., with shear wave velocities of about 2,500 ft/s). If bedrock is not present at a reasonable depth, UHS should be developed for the so-called firm ground conditions (i.e., with shear wave velocities of about 1,000 to 1,200 ft/s). Additional site response analyses may then be conducted, if necessary, using input motions based on this firm-ground reference condition, coupled with a soil column model (no larger than several hundred feet) to take into account site-specific soil conditions and to develop design UHS.

The uniform hazard represents the cumulative contribution of all seismic sources in the region; therefore, the individual contribution of the key sources on the UHS is not immediately apparent. The process of deaggregation of the uniform hazard is needed to identify the relative contribution of the various sources (magnitude–distance [M–D] pairs) to the overall seismic hazard. The deaggregation can be used to highlight the primary M–D pairs for the ground motion parameter of interest: peak ground acceleration (PGA) or spectral acceleration at a selected period. The results of the deaggregation should be used in the development of earthquake ground motions, appropriately accounting for the contributing seismic sources. Individual seismic sources that have a significant contribution to the seismic hazard should be included in the development of earthquake ground motions. In regions where the seismic hazard includes contributions from more than one source and style of faulting (e.g., Pacific Northwest with megathrust subduction zone events, deep Benioff zone earthquakes, and shallow crustal earthquakes), it may be appropriate to develop several suites of ground motions for each design event (e.g., OLE and CLE).

The bedrock or firm soil acceleration time histories used in dynamic analyses reflect the return period of interest and the predominant earthquake magnitudes and may be specified based on the type of analysis being performed. For example, structural time history analysis may rely on motions scaled or matched to the UHS, whereas geotechnical analyses of liquefaction and ground failure may require time histories that are representative of each of the primary magnitude–distance pairs determined in PSHA deaggregation. In both cases, the amplitude and frequency content of the time history should yield an acceleration response spectrum that closely matches the results of the PSHA.

The considerations for selection of representative time histories include seismic source (magnitude), style of faulting, near-fault effects and directivity, directionality, and travel path effects (attenuation). Specifically, the motions should have reasonable amplitude, frequency content, duration, and energy. Optimally, the records should possess characteristics that consider magnitude, distance, and the type of fault that are reasonably similar to those associated with the conditions contributing most to the PGA or spectral response in the period range of interest. Preferred candidate time histories should have been recorded during earthquakes of similar magnitude to the predominant earthquakes, in similar geologic conditions, and at similar source-to-site distances, defined on the basis of the PSHA. Scaling of the candidate time histories is anticipated. Scaling or spectral matching, either in the frequency domain or in the time domain (preferably), before generating acceleration time histories should be minimized. The acceleration, velocity, and pseudo-displacement time histories for all unscaled and scaled records should be provided. In addition, the acceleration and displacement response spectra for unscaled and scaled motions should also be provided.

When three sets of time histories are used in the analysis, the envelope of the spectral acceleration values from each time history should be equal to or higher than the target spectral accelerations in the period range of interest. If the envelope values fall below the target values in this period range, then adjustments should be made to the time history to ensure that the spectral ordinates are equal to or higher than target spectral accelerations.

When seven or more sets of time histories are used, the average of the spectral acceleration values from the set of time histories should be equal to or higher than the target spectral acceleration values in the period range of interest. If the average values fall below the target values, adjustments should be made to the time histories to ensure that average values are equal to or higher than the target spectral accelerations.

When an adequate number of representative recorded time histories is not available, synthetic acceleration time histories developed using widely adopted analytical methods may be used to supplement the collection of motions. The acceleration, velocity, and displacement time histories, as well as acceleration and displacement response spectra, of all simulated earthquake motions should be provided.

When three sets of time histories are used in the analysis, the maximum value of each response parameter should be used in the design, evaluation, and rehabilitation of facilities. When seven or more sets of time histories are used in the analysis, the average value of each response parameter may be used.

The Ports of Los Angeles and Long Beach have completed portwide ground motion studies to develop site-specific ground motion recommendations for OLE and CLE for the entire port areas (Earth Mechanics, Inc. 2006a, 2006b), which are available to designers for projects within the Los Angeles–Long Beach harbor area. These studies include seven sets of orthogonal earthquake time history records, which were developed to be compatible with the UHS. A similar project has been performed at the Port of Oakland (Vahdani et al. 2002).

The development of design spectra for vertical ground accelerations is typically not needed because of the nature of the wharf structures addressed in these standards; however, if desired by the design team, vertical spectral response can be estimated using straightforward vertical–horizontal (v–h) scaling ratios deemed appropriate for the style of faulting and source-to-site distance. Capturing the short-period vibration modes can present undue complexities to designers, especially within the context of a response spectrum analysis design approach, as opposed to a time history analysis method. In view of this less complex engineering design measures may be considered acceptable to accommodate potential effects of vertical ground motions, such as those favored by Caltrans design criteria (Caltrans 2013).

C4.4 LIQUEFACTION AND CYCLIC DEGRADATION POTENTIAL

Liquefaction potential of the soils in the immediate vicinity of or beneath the pier or wharf structure and associated embankment or rock dike should be evaluated for all three design scenarios: OLE, CLE, and the design earthquake (DE). For predominantly sandy soils and nonplastic silt, the potential for liquefaction should be evaluated using the current standards of practice, with updates and refinements as presented in peer-reviewed, technical literature, such as Youd et al. (2001). Supporting documentation for the application of liquefaction evaluation procedures can be found in Martin and Lew (1999) and California State Lands Commission (2013).

Sensitive fine-grained soils, which are common in the marine environment, have been demonstrated to mobilize large strain and exhibit a loss of stiffness and strength when subjected to moderate cyclic loading. This behavior is similar to that of liquefaction in sandy soils, and the associated ground deformations can be damaging to port structures. Screening tools have been developed to identify fine-grained soils that are susceptible to liquefaction and/or large-strain development (Andrews and Martin 2000; Seed et al. 2003; Boulanger and Idriss 2006; and Bray and Sancio 2006), and these procedures provide a vast improvement over older criteria based on the so-called Chinese criteria (Seed et al. 1983 and Youd et al. 2001), which are no longer recommended in practice.

It is recommended that the cyclic resistance of fine-grained soils should be evaluated using recent procedures (e.g., Boulanger and Idriss 2007), and on large, critical projects, supplemented with cyclic testing conducted on high-quality specimens of intact soil, if needed. Those laboratory testing programs typically also address the postcyclic, static shearing resistance of the soil to evaluate the potential for cyclic degradation and provide input strength parameters for post-earthquake stability analyses of slopes and embankments.

If foundation or backfill soils are shown to be susceptible to high excess pore water pressure generation, liquefaction, and/or cyclic degradation, then the vertical and lateral extent of the strata should be clearly shown on site profiles. If the factor of safety against liquefaction is less than 1.4, the effects of high pore water pressure on the strength and stiffness of the soil may need to be evaluated. Liquefaction hazards that warrant evaluation include the following:

a. Flow slides of native soils or unrestrained hydraulically placed fill along or adjacent to slopes;
b. Large ground failures involving containment dikes, embankments, and slopes supporting wharves and piers;
c. Limited lateral spreads of the dike–embankment–slope system on the order of feet or less triggered and sustained by the earthquake ground shaking; and
d. Post-liquefied settlement of the dike–embankment–slope system and underlying foundation soils.

Although ground improvement measures may be considered as an option to mitigate liquefaction potential and ground failures, these treatment measures may be of limited extent or may be judged to be unnecessary if it can be shown by performing the analyses required in the provisions that the required structural performance is met.

C4.5 SLOPE STABILITY AND LATERAL GROUND DEFORMATION

A flow chart of the process for evaluating slope stability and lateral ground deformations is found in Fig. C4-1.

C4.5.3 Post-Earthquake Static Slope Stability Post-earthquake static analysis is required if foundation and fill soils are susceptible to strength loss when subjected to design-level cyclic loading. Shear strength parameters compatible with earthquake-induced pore-pressure generation and cyclic shear strains should be used in the analysis. The minimum allowable factor of safety of 1.1 is imposed to safeguard against flow slides or large translational or rotational failures.

C4.5.4 Pseudostatic Slope Stability The pseudostatic stability evaluation incorporating a minimum specified horizontal seismic coefficient and a minimum allowable factor of safety is required to supplement static and deformation-based stability analyses

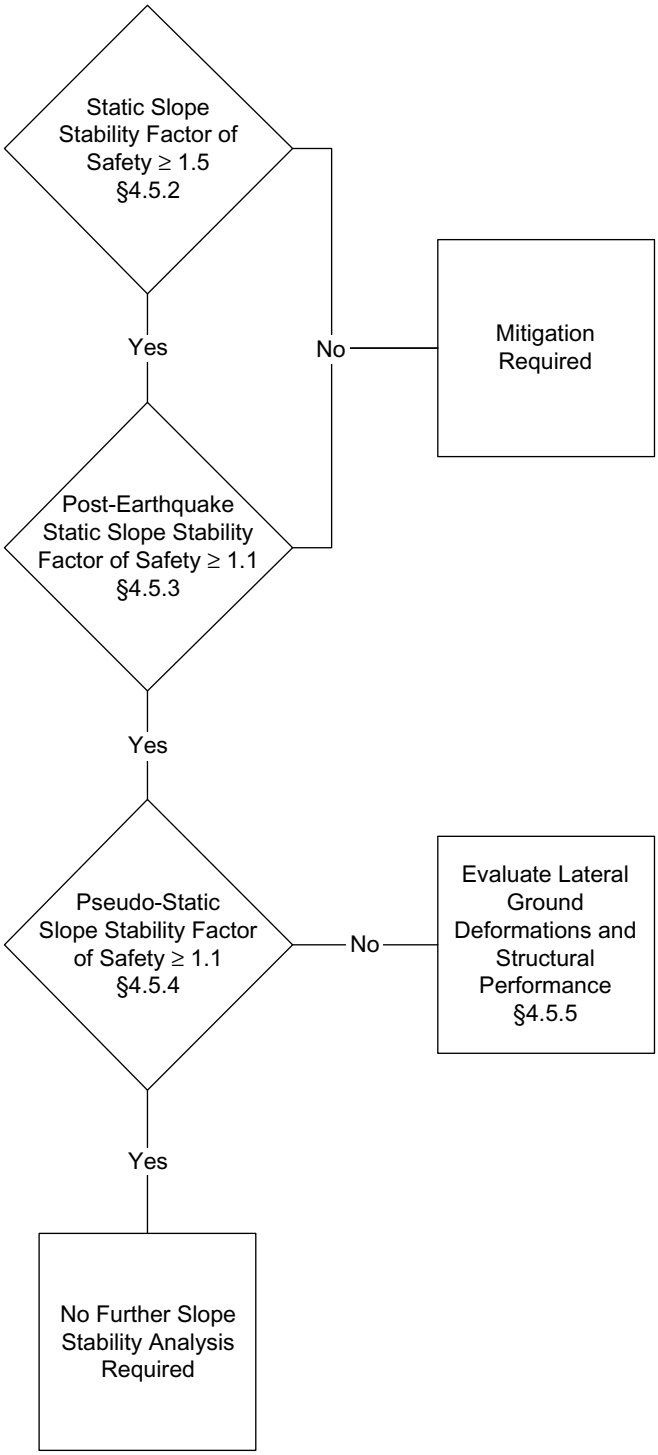

Fig. C4-1. Evaluation process for slope stability and ground deformations

and safeguard against major ground deformation during design-level events. The minimum horizontal seismic coefficient used in pseudostatic analysis is related to the PGA for the hazard level of interest (i.e., OLE, CLE, and DE). The ratio of the horizontal seismic coefficient to the PGA can be reduced in pseudostatic analysis, because larger soil deformations are considered tolerable. Many agencies require the use of a minimum horizontal seismic coefficient of 0.15 g (County of Orange 1981). Alternative requirements exist, for example, the National Cooperative Highway Research Program Report 611 recommends the use of one-half of the peak horizontal ground acceleration (NCHRP 2008). The same recommendations have been adopted for this standard. For this range of accelerations, the minimum factor of safety of 1.1 indicates small lateral deformations (on the order of 25 to 50 mm) that can be tolerated by pile foundations. Therefore, further evaluation of "free field" lateral ground deformations or kinematic loading on piles is not considered necessary.

It is not a standard practice to include the vertical acceleration coefficient in the pseudostatic analysis. Therefore, the use of a vertical acceleration coefficient is not required.

C4.5.5 Lateral Ground Deformations Earthquake-induced ground deformations should be determined using simplified limit equilibrium procedures (e.g., Newmark sliding block or recent enhancements) or two-dimensional numerical models suitably validated for port applications. Cyclic loading for the former procedures should be based on the PGA at the ground surface, unadjusted for liquefaction or cyclic degradation. Shear strength parameters compatible with the pore-pressure generation in potentially liquefied soils (Seed and Harder 1990; California State Lands Commission 2013), post-earthquake strength of liquefied soils (Seed and Harder 1990; Seed et al. 2003; Olson and Johnson 2008) and sensitive clays (Skempton 1964; Duncan and Wright 2005; Fang and Daniels 2006) should be used in the analysis. A conservative estimate of lateral ground deformations should be made by ignoring the presence of the pier or wharf foundation system in the evaluations.

C4.6 FAULT RUPTURE

The location of piers and wharves is typically determined by geographic and project constraints; therefore, locating a structure outside the limits of a fault rupture hazard zone may not be possible in some instances. It should be noted, however, that the probability of damaging ground surface rupture at a project site is lower than that corresponding to the design ground shaking hazard. If a situation arises where a pier or wharf must be sited within a potential fault rupture zone, the effects of potential fault rupture must be considered as part of the design process.

C4.7 LATERAL LOADINGS FOR SOIL–STRUCTURE INTERACTION

Two loading conditions for the piles should be considered in the soil–structure interaction evaluation: (1) inertial loading caused by the wharf deck and other contributing mass under seismic conditions, and (2) kinematic loading associated with the influence of permanent ground deformation on the piles. Inertial loading is associated with earthquake-induced lateral loading on the structure, whereas kinematic loading refers to the loading on foundation piles from earthquake-induced lateral deformations of the dike–embankment–slope system.

The inertial loading condition tends to induce maximum moments in the upper part of the piles, whereas kinematic loading tends to impose maximum moments in the deep, lower regions of the piles. These two important aspects of seismic loading are often considered to act at different times during the earthquake shaking and, therefore, may not be directly summed to yield the ultimate loading on the pile. These loading conditions can be uncoupled (separated) from each other during design. This assumption, however, should be checked on a project-specific basis. A coupled analysis may be needed if these two loading conditions cannot be separated.

C4.7.1 Inertial Loading The evaluation of inertial loading can typically be performed by ignoring the foundation deformations. In structural analysis, this evaluation is commonly modeled by the following technique: one end of the lateral soil spring at a given depth is attached to the corresponding pile node, and the other end is assumed to be fixed. For the sake of simplicity, it is usually justifiable to analyze piles for the inertial response of the effective mass of deck, based on the assumption that free-field deformations of the ground in the vicinity of the piles may be ignored.

C4.7.2 Kinematic Loading Kinematic pile loading on piles associated with earthquake-induced ground deformation usually arises from permanent deformation of weak soils beneath, and potentially within, the slope or earth structure. Initial estimates of free-field seismic ground deformations may be determined using simplified procedures based on the Newmark sliding block analysis (Newmark 1965). If deformations are considered acceptable in terms of the pile performance, then no further analyses are necessary. Exceptions may be cases where subsurface conditions indicate the presence of thin layers of weak soil beneath the dike–embankment–slope that could result in concentrated deformations within these layers. The resulting double curvature imposed on the piles could lead to potentially unacceptable pile performance. In such cases, more detailed evaluations may be necessary.

In cases where the deformations estimated using the simplified Newmark sliding block method are unacceptable, site-response evaluations may be necessary to revise the free-field dike deformation estimates based on revised ground motions. One-dimensional site response analyses may need to be performed to incorporate local site effects and develop site-specific acceleration-time histories at the base of the sliding block ("within motions") for Newmark analyses. Sensitivity analyses should be performed on factors affecting the results, specifically soil strength and earthquake time histories. The site-specific time histories representing "within motions" may be used in the simplified Newmark sliding block method to revise the dike deformation estimates. If the revised dike deformations using this method exceed the acceptable values, more detailed evaluations may be necessary.

If the results of relatively straightforward Newmark-type analyses indicate that slopes are vulnerable to excessive deformations during design-level events, more sophisticated numerical models may be applied to refine the displacement estimates and illustrate the patterns of deformation that are not provided in limit equilibrium analyses. Two- and three-dimensional numerical models should first be validated for port-related applications. In some cases, the results of prior, recent numerical modeling at adjacent sites may be applied for new construction. The results of numerical soil–structure interaction analyses for kinematic loading on prior projects may be appropriate to use if it can be demonstrated that the current project includes similar structures and foundations, similar soil conditions, similar demands, and that the numerical results represent a conservative upper-bound solution for the pile curvature demands for the wharf under consideration.

If this method does not result in displacements that are considered acceptable, additional evaluations can be made by incorporating the stabilizing effects of the piles, termed "pile pinning." If it can be shown by structural analysis that the pile displacement demands estimated by simplified Newmark evaluations while incorporating the "pile pinning" effects are structurally acceptable, no further kinematic evaluations are necessary. It should be noted that this procedure is an iterative process and requires close coordination between the geotechnical engineer and the structural engineer.

In the evaluation of soil–structure interaction involving "pile pinning," the geotechnical engineer should provide the structural engineer with level-ground *p-y* curves for all soil layers, suitably adjusted for cyclic behavior, performing pushover analysis to estimate the pile displacement capacities, and corresponding pile shear within zones of weak soil. For the pushover analysis, the estimated displacement profile may be assumed to be linear within the thickness of the weak soil layer (i.e., zero at and below the bottom of the layer to the maximum value at and above the top of the weak layer). At some distance above and below the weak soil layer (10 pile diameters or more), the pile can often be modeled as fixed against rotation, and also against translation relative to the soil displacement. Between these two points (i.e., 10 times the pile diameter or more from the soil layer), lateral soil springs are provided, which allow deformation of the pile relative to the deformed soil profile. The resistance against slope movement provided by the pile can be estimated using the pile shear in the weak soil zone (Arulmoli et al. 2004). The geotechnical engineer should then perform a second suite of pseudostatic slope stability analyses wherein the shear resistance provided by the piles is incorporated and the refined displacement demands are estimated using simplified Newmark analysis. If the estimated displacement demands are less than the displacement capacities, no further analysis for kinematic loading is necessary. As previously mentioned, in cases where subsurface conditions indicate the presence of continuous, thin, liquefiable, and/or soft soils beneath the dike that could result in concentrated deformations within these layers, more detailed soil-dynamic structure interaction analyses may be necessary.

If more detailed numerical analyses are deemed necessary to provide input to the structural engineers, two-dimensional dynamic soil–structure interaction analysis of the deck–pile–dike–soil system using numerical finite element or finite difference analyses should be performed. Sensitivity analyses should also be performed on factors affecting the results. As a minimum, deformation profiles along the length of the various pile rows should be provided to the structural engineer to estimate strains and stresses in the piles for the purpose of checking performance criteria.

C4.8 SOIL–PILE BEHAVIOR UNDER LATERAL LOADING

C4.8.1 Lateral Soil Springs An important consideration in soil–pile interaction analysis is the development of reliable estimates of stiffness coefficients for soil and other material behavior under applied lateral load, typically known as *p-y* springs. Various models have been developed for estimating soil springs for sand (Reese et al. 1974; O'Neill 1983), soft clay (Matlock 1970), stiff clay above the water table (Reese and Welch 1975), and stiff clay below the water table (Reese et al. 1975). Detailed discussions on *p-y* curves for different soil types are provided in the American Petroleum Institute's Recommended Practice 2A (2000). Information on *p-y* springs for gravel and larger particles (such as quarry rock typically used in underwater slopes), is limited. Until more information is available, the sand model may be considered appropriate for these material types.

Input parameters for these models should be based on soil properties obtained from in situ and laboratory tests performed on soil samples obtained during the subsurface investigation. Soil moduli should be adjusted to be strain compatible with the excitation level according to free-field soil dynamic response modeling. Soils that are subject to cyclic strength loss (i.e.,

liquefaction or cyclic degradation) provide limited or no lateral resistance, and therefore, the *p-y* curves should be modified accordingly (Liu and Dobry 1995; Wilson et al. 2000; Ashford and Juirnarongrit 2005).

To account for the effects of closely spaced piles on the global pile group stiffness, appropriate reduction factors should be applied to the *p-y* curves. These reduction factors for group effects are dependent on the center-to-center spacing of the piles, as well as the location of the pile within the group. Each pile within the group carries a different modifying factor, depending on its relative location to adjacent piles and the direction of loading. Current state-of-practice methodologies are described in Reese and Van Impe (2001). Further reduction to the *p-y* curves may be required to account for the construction method of the pile and the nature of the loading (static versus dynamic).

Commercially available computer programs or validated spreadsheets can be used to generate *p-y* springs for nonlinear soil–pile interaction analysis for a variety of soil conditions.

C4.8.2 Upper- and Lower-Bound Springs There is a significant degree of uncertainty in *p-y* curve development in wharf design practice because of inherent variability, including the following: (1) embankment rock properties, (2) construction methods for the dike–embankment–slope, (3) sloping dike–embankment configuration, and (4) the simplification of *p-y* curves in structural analysis (i.e., linear, bilinear, or trilinear versus nonlinear). In view of these uncertainties, the superstructure inertial response analyses should be conducted assuming upper- and lower-bound *p-y* stiffness scenarios to ensure that the resultant design is sufficiently robust to accommodate a wide range of potential *p-y* curve behavior. However, the design analyses should also be conducted using consistent soil support stiffness assumptions for both demand assessment and capacity evaluation to avoid undue conservatism. The common assumption that adopting softer *p-y* curves is conservative is not valid for all actions. Soft *p-y* curves result in increased displacement demand, which may be critical for services connecting to the structure. However, soft *p-y* curves also result in increased displacement capacity, compared to the case when stiff *p-y* curves are used. Until analyses are carried out, it is not clear whether soft or stiff *p-y* curves create the critical condition for the structure. Pile shear forces are highest for stiff *p-y* curves, since the pile in-ground plastic hinge forms closer to the dike surface. For a given pile moment capacity, and a decreased distance between pile-top and in-ground hinges, the pile shear force is thus maximized. Failure to recognize this situation and to provide for pile shear strength accordingly could potentially result in pile shear failure. As a consequence of these considerations, it is important to consider both upper- and lower-bound *p-y* characteristics.

The concepts of upper-bound and lower-bound *p-y* curves and upslope and downslope *p-y* curves address two separate aspects of soil–pile interaction. The latter results from considerations of increased soil resistance (strength and stiffness) in the upper layers, when the pile is deformed into the inclined slope (upslope), rather than away from the inclined slope (downslope). Although the difference in soil spring characteristics upslope and downslope can be considerable, the influence in terms of pier or wharf response is reduced when it is recognized that (a) the pile at some depth below the surface is moving in the reverse direction, and (b) the relative difference in stiffness in both directions decreases with depth below the slope. It would thus be unrealistic and inappropriate to use upslope soil springs for the full height of pile embedment. However, in the absence of additional research, it is recommended that the same values be used in analysis for upslope and downslope stiffness and strength, with the proviso, noted in the previous paragraph, that these constant properties should be varied between upper-bound and lower-bound values.

The *p*-multipliers for the upper- and lower-bound springs for typical container wharves at the Port of Los Angeles (POLA 2010) and the Port of Long Beach (POLB 2012) are 2.0 and 0.3, respectively. These values may be considered appropriate for slopes on the order of 1.5 : 1 ($H:V$) to 1.75 : 1 ($H:V$), unless rational analyses or testing shows otherwise. For other sloping conditions, upper-bound and lower-bound springs should be developed on a site-specific basis.

C4.9 SEISMICALLY INDUCED SETTLEMENT

Effects of seismically induced settlement include settlement of utilities, differential settlement beneath shallow foundations, and potential downdrag loads on foundation piles. When an estimate of seismically induced settlement is required, it should be estimated for both saturated and unsaturated soils, although the greatest settlement can occur after liquefaction in saturated soils leading to downdrag loads caused by skin friction mobilized along the pile in overlying, nonliquefied soil layers.

Simplified procedures for estimating seismically induced settlement that results from postliquefaction consolidation (i.e., one dimensional strain) are provided in Tokimatsu and Seed (1987) and Ishihara and Yoshimine (1992). Care should be taken when estimating settlements after liquefaction for the following cases: (1) applying appropriate correction factors to penetration resistances for soils containing appreciable amounts of fines when using simplified methods, (2) assessing areas that could be prone to lateral spreading or flow failure, (3) accounting for the influence of overlying nonliquefiable layers on manifestation of settlements at the ground surface, and (4) converting total settlements to differential settlements.

Two simplified procedures for estimating seismically induced settlement in unsaturated soils that may exist above the water table are provided in (Tokimatsu and Seed 1987). Both of these procedures use peak cyclic shear strain to estimate the volumetric strain of a soil and then integrate the volumetric strains vertically through the soil section to compute the total settlement. The first procedure (Tokimatsu and Seed 1987) is applicable to clean sands (natural soil or fill). The second procedure (Stewart et al. 2004) only applies to compacted fills but accommodates soils that have various fines contents and fines plasticity.

C4.10 AXIAL PILE PERFORMANCE

C4.10.1 Axial Pile Capacity With respect to the piles driven through or embedded in marginal dikes, an important consideration for axial pile capacity is settlement-induced downdrag on pile foundations. If liquefaction or seismically induced settlement is anticipated, the ultimate axial geotechnical capacity of piles under seismic conditions should be evaluated for the effects of liquefaction and/or downdrag forces on the pile. Because of the short-term nature of the seismically induced downdrag forces, the factor of safety may be less than that used in the allowable static pile capacity evaluation. The ultimate geotechnical capacity of the pile during liquefaction should be determined on the basis of the residual strength of the soil for those layers where the factor of safety for liquefaction is determined to be less than 1.1 and for suitably reduced shearing resistance (skin friction) for soils that exhibit significant excess pore-pressure generation yet do not reach full liquefaction. When seismically induced settlements are predicted to occur during design earthquakes, the downdrag loads should be computed and the

combination of downdrag load and service load should be determined. Only the tip resistance of the pile and the side friction resistance below the lowest layer contributing to the downdrag should be used in the capacity evaluation. The ultimate axial geotechnical capacity of the pile should not be less than the combination of the seismically induced downdrag force and the maximum of the service load combinations.

C4.10.2 Axial Pile Springs The geotechnical engineer should develop axial springs (*t-z*) for piles with input from the structural engineer on proposed pile types and properties. The *t-z* springs may be developed either at the top or at the tip of the pile, or at multiple locations along the pile, as requested by the structural engineer. The representative location for the *t-z* springs must be clearly identified. If the springs are developed at the pile tip, they should include both the frictional resistance along the pile (i.e., friction springs [*t-z*]) and tip resistance at the pile tip (i.e., tip springs [*q-w*]). If *t-z* springs are developed at the pile tip, the appropriate elastic shortening of the pile should also be included in the springs. Linear or nonlinear springs may be developed as requested by the structural engineer. During development of the axial soil springs, the ultimate capacity of the soil resistance along the side of the pile and at the tip of the pile should be used. Normally, it is assumed that the soil resistance along the side of the pile is developed at very small displacements (e.g., less than 0.5 in.), whereas the resistance at the tip of the pile requires large displacements in soil (e.g., 5% of the pile diameter).

C4.10.3 Upper- and Lower-Bound Springs Because of the uncertainties associated with the development of axial springs, such as the axial soil capacity and load distributions along the piles and the simplified spring stiffnesses used, both upper-bound and lower-bound limits should be used for the axial springs. The t-multipliers for the upper- and lower-bound springs for typical container wharves at the Ports of Los Angeles (POLA 2010) and Long Beach (POLB 2012) are 2.0 and 0.5, respectively. In the absence of rational analyses or testing, these values may be considered appropriate. Note that the consistency of upper- and lower-bound spring properties should be considered. For example, the combinations of upper-bound *p-y* and lower-bound *t-z* springs need not be considered, and vice versa.

C4.11 EARTH PRESSURES

C4.11.1 Seismic Earth Pressures The evaluation of seismic earth pressures on waterfront retaining structures must consider the influence of site-specific factors, such as ground motion intensity, sloping ground, reduction in soil strength caused by excess pore-pressure generation, and tolerable deformation limits for the structure. These factors and others may limit the applicability of routine procedures for estimating lateral earth pressures on structures. For example, the Mononobe–Okabe method (NAVFAC 1986), based on classical earth pressure theory, may be applied for cases involving cohesionless fill that is judged to be resistant to the generation of significant excess pore pressure during seismic loading; however, significantly more sophisticated evaluation methods are required for soils vulnerable to cyclic strength loss. In addition, the areas of application and magnitude of static loads that affect the seismic performance of retaining walls also need to be addressed in a site-specific manner.

The Mononobe–Okabe equations (NAVFAC 1986) and recent refinements, or other appropriate methods, may be used to estimate earth pressures caused by competent soil under seismic loading.

The passive soil resistance at the rear of a marginal wharf deck may be taken into account in estimating the demand displacement of a marginal wharf. An elastic–plastic load-deformation model may be assumed analogous to the model approach commonly used for bridge abutments. An initial secant stiffness $K_{\text{eff}} = P_p/0.02H$ may be used where H is the height of the wharf back wall able to mobilize passive pressure, and P_p is the total load from ultimate passive backfill pressure (assumed to be uniformly distributed) per foot of wall. The passive resistance of the soil must account for possible cyclic strength loss.

C4.12 REFERENCES

American Petroleum Institute. (2000). *Recommended practice for planning, designing and constructing fixed offshore platforms—Working stress design*, API Recommended Practice 2A-WSD (RP2A-WSD), 21st Ed., American Petroleum Institute, Washington, DC.

Andrews, D. C. A., and Martin, G. R. (2000). "Criteria for liquefaction of silty soils." *Proc., 12th World Conference on Earthquake Engineering, Auckland, New Zealand*, New Zealand Society for Earthquake Engineering, Upper Hutt, NZ.

Arulmoli, K., Martin, G. R., Gasparro, M. G., Shahrestani, S., and Buzzoni, G. (2004). "Design of pile foundations for liquefaction-induced lateral spread displacements." *Geotechnical engineering for transportation projects*, *Geotechnical Special Publication No. 126*, M. K. Yegian and E. Kavazanjian, eds., American Society of Civil Engineers, Reston, VA, 1673–1681.

Ashford, S. A., and Juirnarongrit, T. (2005). "Push-over analyses of piles in laterally spreading soil." *Seismic performance and simulation of pile foundations in liquefied and laterally spreading ground*, *Geotechnical Special Publication No. 145*, R. W. Boulanger and K. Tokimatsu, eds., American Society of Civil Engineers, Reston, VA, 109–120.

Boulanger, R. W., and Idriss, I. M. (2006). "Liquefaction susceptibility criteria for silts and clays." *J. Geotech. Geoenviron. Eng.*, 132(11), 1413–1426.

Boulanger, R. W., and Idriss, I. M. (2007). "Evaluation of cyclic softening in silts and clays." *J. Geotech. Geoenviron. Eng.*, 133(6), 641–652.

Bray, J. D., and Sancio, R. B. (2006). "Assessment of the liquefaction susceptibility of fine-grained soils." *J. Geotech. Geoenviron. Eng.*, 132(9), 1165–1177.

California Department of Transportation (Caltrans). (2013). *Seismic design criteria*, Version 1.7, Sacramento, CA.

California State Lands Commission. (2013). *California code of regulations*, Part 2, California Building Code, Chapter 31F, Title 24, commonly referred to as the Marine Oil Terminal Engineering and Maintenance Standards (MOTEMS), California State Lands Commission, Sacramento, CA.

County of Orange. (1981). *County of Orange grading manual*, County of Orange, Santa Ana, CA.

Duncan, J. M., and Wright, S. G. (2005). *Soil strength and slope stability*, Wiley, New York.

Earth Mechanics, Inc. (2006a). "Port-wide ground motion and Palos Verdes fault study." Port of Los Angeles, Los Angeles, California, Prepared for the Port of Los Angeles.

Earth Mechanics, Inc. (2006b). "Port-wide ground motion study." Port of Long Beach, Long Beach, California, Prepared for the Port of Long Beach.

Fang, H-Y. and Daniels, J. (2006). *Introductory geotechnical engineering: An environmental perspective*, Taylor and Francis, New York, 306–313.

Ishihara, K., and Yoshimine, M. (1992). "Evaluation of settlement in sand deposits following liquefaction during earthquakes, soils and foundations." *Jpn. Soc. Soil Mech. Found. Eng.*, 32(1), 173–188.

Liu, L., and Dobry, R. (1995). "Effect of liquefaction on lateral response of piles by centrifuge model tests." *NCEER Bulletin*, 9(1), 1–5.

Martin, G. R., and Lew, M., eds. (1999). "Recommended procedures for implementation of DMG Special Publication 117; guidelines for analyzing and mitigating liquefaction hazards in California." Southern California Earthquake Center, University of Southern California, Los Angeles, CA.

Matlock, H. (1970). "Correlations for design of laterally loaded piles in soft clay." *Proc., Offshore Technology Conf.*, Vol. I, Paper No. 1204, OTC, Houston, 577–594.

National Cooperative Highway Research Program (NCHRP). (2008). "Seismic analysis and design of retaining walls, buried structures, slopes, and embankments." NCHRP Report 611. Transportation Research Board, Washington, DC.

Naval Facilities Engineering Command (NAVFAC). (1986). *Foundation and earth structures*, Design Manual 7.02, Department of the Navy, Naval Facilities Engineering Command, Alexandria, VA.

Newmark, N. M. (1965). "Effects of earthquakes on dams and embankments." *Geotechnique*, 15(2), 139–160.

O'Neill, M. W. (1983). "Group action in offshore piles." *Geotechnical practice in offshore engineering*, S. G. Wright, ed., American Society of Civil Engineers, New York, 25–64.

Olson, S. M., and Johnson, C. I. (2008). "Analyzing liquefaction-induced lateral spreads using strength ratios." *J. Geotech. Geoenviron. Eng.*, 134(8), 1035–1049.

Port of Long Beach (POLB). (2012). *Wharf design criteria*, Version 3.0, Port of Long Beach, Long Beach, CA.

Port of Los Angeles (POLA). (2010). *Code for seismic design, repair, and upgrade of container wharves*, Port of Los Angeles, Los Angeles, CA.

Reese, L. C., and Van Impe, W. F. (2001). *Single piles and pile groups under lateral loading*, A. A. Balkema, Rotterdam, Netherlands.

Reese, L. C., and Welch, R. C. (1975). "Lateral loading of deep foundations in stiff clay." *J. Geotech. Eng. Div.*, 101(7), 633–649.

Reese, L. C., Cox, W. R., and Koop, F. D. (1974). "Analysis of laterally loaded piles in sand." *Proc. Offshore Technology Conf.*, Vol. II, Paper No. 2080, OTC, Houston, 473–484.

Reese, L. C., Cox, W. R., and Koop, F. D. (1975). "Field testing and analysis of laterally loaded piles in stiff clay." *Proc., Offshore Technology Conf.*, Vol II, OTC, Houston, 473–484.

Seed, R. B., and Harder, L. F., Jr. (1990). "SPT-based analysis of cyclic pore pressure generation and undrained residual shear strength." *Proc., H. Bolton Seed Memorial Symp.*, BiTech Publishers, Ltd., Vancouver, BC, Canada.

Seed, H. B., Idriss, I. M., and Arango, I. (1983). "Evaluation of Liquefaction Potential Using Field Performance Data," *J. Geotech. Eng.*, 109(3), 458–482.

Seed, R. B., Reimer, M. F., Cetin, K. O., Sancio, R. B., Moss, R. E. S., Bray, J. D., et al. (2003). *Recent Advances in soil liquefaction engineering: a unified and consistent framework*, 26th Annual ASCE Los Angeles Section, Spring Seminar, Long Beach, CA.

Skempton, A. W. (1964). "Long term stability of clay slopes." *Geotechnique*, 14(2), 71–102.

Stewart, J. P., Whang, D. H., Moyneur, M., and Duku, P. (2004). *Seismic compression of as-compacted fills with variable levels of fines content and fines plasticity*, CUREE Publication No. EDA-05, Consortium of Universities for Research in Earthquake Engineering, Richmond, CA.

Tokimatsu, K., and Seed, H. B. (1987). "Evaluation of settlement in sands due to earthquake shaking." *J. Geotech. Engrg. Div.*, 113(8), 861–878.

Vahdani, S., Egan, J., and Pyke, R. (2002). "Seismic design ground motion & site response analysis procedure." Prepared by the Geotechnical Seismic Design Review Board for the Port of Oakland, CA.

Wilson, D. W., Boulanger, R. W., and Kutter, B. L. (2000). "Observed seismic lateral resistance of liquefying sand." *J. Geotech. Geoenviron. Eng.*, 126(10), 898–906.

Youd, T. L., Idriss, I. M., Andrus, R. D., Arango, I., Castro, G., Christian, J. T., et al. (2001). "Liquefaction resistance of soils: Summary report from the 1996 NCEER and 1998 NCEER/NSF workshops on evaluation of liquefaction resistance of soils." *J. Geotech. Geoenviron. Eng.*, 127(10), 817–833.

This page intentionally left blank

CHAPTER C5
FORCE-BASED DESIGN

C5.1 INTRODUCTION

C5.1.1 Scope Force-based analytical methods presented in this chapter are in general accordance with force-based provisions of ASCE 7 (2005). Section 15.5.6 of ASCE 7 (2005) presents limited requirements for pier and wharf structures. In general, the document mentions that the effects of liquefaction and soil failure collapse mechanisms must be considered in the design.

C5.4 FORCE-BASED DEMAND ANALYSIS

C5.4.1 Equivalent Lateral Force Analysis The intent of this section is to allow the equivalent lateral force analysis method of ASCE 7 (2005) with only minor modifications. In general, the designer should be aware that force-based analysis specified in ASCE 7 (2005) may produce pier and wharf structures that are less economical than those designed using the other displacement-based methods presented in the document if seismic loading is more severe than other lateral service loads such as those associated with waves or mooring. The designer should also be aware that marginal wharves are, in general, not well suited to force-based design because of the large eccentricity between the center of mass and center of rigidity or the piles in the elastic range. The calculated eccentricity in this case may create a torsional irregularity greater than that allowed in ASCE 7 (2005), which may be difficult to solve without taking into account hinging of the landside piles.

C5.4.1.1 Seismic Base Shear Although present in ASCE 7 (2005), the equation for seismic base shear is presented in this standard to provide a clear modification of the seismic design coefficient C_s as necessary to account for response modification factors unique to pier and wharf construction.

C5.4.1.2 Calculation of Seismic Response Coefficient If force-based design is used, the design coefficients are needed to properly analyze the structure. The elastic base shear is reduced by a response modification factor R that accounts for the ductility of the seismic force resisting system and period shift that takes place when a mechanism forms. A deflection amplification factor C_d is also used to amplify the reduced drift calculated using the response modification factor. The design coefficients for prestressed concrete piles and steel pipe piles given in Table 5-1 are taken from Table 15.4-2 of ASCE 7 (2005) for inverted pendulum structures.

C5.4.1.3 Fundamental Structural Period The approximate fundamental period approach provided in ASCE 7 (2005) applies only to building structures and is not applicable to pier and wharf-type structures. The effects of soil–structure interaction on the natural period of the structure are typically significant and must be considered.

C5.5 MODELING

C5.5.1 Section Properties Section properties in Table 5-2 are adapted from MOTEMS (California State Lands Commission 2010).

C5.5.3 Pile Stiffness The use of an equivalent depth to fixity is permitted for force-based design. However, this method has not been found to accurately predict the location and magnitude of moments in the in-ground hinge region, particularly if the same point of fixity is used for piles of varying stickup height.

C5.6 FORCE-BASED CAPACITY ANALYSIS

C5.6.2 Shear Strength of Concrete Piles The shear strength of prestressed concrete piles is a simplified modification of the seismic approach used in ACI 318 (2008) as required to account for the different connection types used in this standard. Other approaches to shear design are found in AASHTO (2004), MOTEMS (California State Lands Commission 2010), and Caltrans (2006).

C5.6.3 Confinement for Prestressed Piles The equation presented in this section is identical to the equation presented in the *International Building Code* (ICC 2006) and is a combination of the equations from the PCI Committee on Prestressed Concrete Piling (1993) and the upper bound from the *Uniform Building Code* (ICBO 1997). The PCI Committee equation intended to address adequate ductility capacity that is available for piles with lower axial loading and reduced spiral pitch (which are the subject of this standard). The committee recognizes that recent testing done by Fanous et al. (2010) may result in changes to this equation in the future. Current research at the Citadel (Mays and Hill 2007) also shows that for low levels of axial loading, the equation from the *International Building Code* (ICC 2006) results in curvature capacities in excess of 20.

The length of the ductile region as specified in this standard is a modification of the lengths given in the *International Building Code* (ICC 2006) and ACI 318 (2008) that are more applicable to buildings. The 35-ft minimum length specified in the *International Building Code* (ICC 2006) is excessive for pier and wharf piling landside of the dike crest (unless such a value is determined as the distance from the bottom of the pile deck to the point of maximum moment plus three times the pile dimension).

The additional requirements for spiral outside the ductile regions are intended to account for variations in soil properties not considered by the geotechnical engineer and pile installation variability not accounted for in the design.

The spacing provisions of this section are intended to preclude strand buckling as a failure mechanism.

C5.6.4 Shear Strength of Steel Pipe Piles AISC (2005) contains provisions for the shear strength of pipe piles and for neglecting the contribution from the concrete plug. However, in most cases, dowels are used to transfer bending moment to the deck and to provide a direct load path for shear transfer when pipe embedment is minimal. In such cases, the shear strength contribution from the concrete is paramount and must be considered. Equation 6.4 is taken from MOTEMS (California State Lands Commission 2010).

C5.6.5 Overstrength Shear Force This force is based on the Port of Long Beach *Wharf Design Criteria* (2012).

C5.7 REFERENCES

American Association of State Highway and Transportation Officials (AASHTO). (2004). *AASHTO LRFD bridge design specifications,* 3rd Ed., American Association of State Highway and Transportation Officials, Washington, DC.

American Concrete Institute (ACI). (2008). *Building code requirements for structural concrete* (ACI 318-08), and commentary (ACI 318R-08), American Concrete Institute, Farmington Hills, MI.

American Institute of Steel Construction (AISC). (2005). *Specification for structural steel buildings*, American Institute of Steel Construction, Chicago.

American Society of Civil Engineers (ASCE). (2005). *Minimum design loads for buildings and other structures,* ASCE 7-05, American Society of Civil Engineers, Reston, VA.

California State Lands Commission. (2010). *California code of regulations*, Part 2, California Building Code, Chapter 31F, Title 24, commonly referred to as the Marine Oil Terminal Engineering and Maintenance Standards (MOTEMS), California State Lands Commission, Sacramento, CA.

California Department of Transportation (Caltrans). (2010). *Seismic design criteria*, Version 1.6, Caltrans, Sacramento, CA.

Fanous, A., Sritharan, S., Suleiman, M., Huang, J., and Arulmoli, A. (2010). "Minimum spiral reinforcement requirements and lateral displacement limits for prestressed concrete piles in high seismic regions." ISU-ERI-Ames Report ERI-10321, A final report to the Precast/Prestressed Concrete Institute, Department of Civil, Construction and Environmental Engineering, Iowa State University, Ames, IA.

International Code Council (ICC). (2006). *International building code,* International Code Council, Falls Church, VA.

International Conference of Building Officials (ICBO). (1997). *Uniform building code*, International Conference of Building Officials, Whittier, CA.

Mays, T. W., and Hill, T. E. (2007). "Rethinking requirements for precast prestressed concrete piles in areas of high seismicity." *New horizons and better practices,* R. Lyons, ed., American Society of Civil Engineers, Reston, VA.

Prestressed Concrete Institute (PCI) Committee on Prestressed Concrete Piling. (1993). "Recommended practice for design, manufacture and installation of prestressed concrete piling." *PCI Journal*, 38(2), 14–41.

Port of Long Beach (POLB). (2012). *Wharf design criteria*, Version 3.0.

CHAPTER C6
DISPLACEMENT-BASED DESIGN

C6.1 GENERAL

C6.1.1 Scope This chapter relies heavily on common practices in the ports industry and relies heavily on MOTEMS (California State Lands Commission 2010), the Port of Los Angeles (POLA) *Seismic Design Code* (2010), which was developed by POLA and is used for the design of all container wharf structures at POLA, and the Port of Long Beach (POLB) *Wharf Design Criteria* (2012), which is used for design of new structures at POLB. All of these documents have been developed over a period of several years and are founded on historic performance, as well as extensive testing.

The demand analysis of piers and wharves should be based on an appropriate ground motion representation, as described in this chapter, and should be performed using accepted principles of dynamics. A mathematical model of the physical structure should represent the spatial distribution of the mass and stiffness of the structure to an extent that is adequate for the calculation of the significant features of its dynamic response.

C6.4 OVERVIEW OF SEISMIC DESIGN APPROACH

C6.4.1 General The displacement-based design approach is not intended to be a simple approach that is necessarily implemented during preliminary design stages. It is expected that some level of design will have been performed for service loads, such as mooring and berthing. It is expected that a preliminary design will provide an overall layout and pile arrangement and an initial determination of the lateral load resisting system.

C6.5 INELASTIC MATERIAL PROPERTIES

C6.5.1 General Expected material properties are adapted from the POLB (2012) and based on previous research (Joen and Park 1990; Ferritto et al. 1999).

C6.5.2 Stress–Strain Curves

C6.5.2.1 Concrete Stress–Strain Curves The models for confined and unconfined concrete are based on Mander's model for concrete (Mander and Priestley 1988). Given the complexity of the equations used for Mander's model, this standard does not present the equations explicitly. Also, it is recognized that although Mander's model may be the most widely used model for confined concrete and that limitations on its use are less than for other models referenced in the literature, there are special cases where the accuracy of the model may be questioned and a more accurate model of the confined concrete may be warranted.

Mander's model has been used successfully to determine the required thickness of steel plate used to retrofit bridge columns (Mander and Priestley 1988). However, recent research (Nataraja et al. 1999 and Li et al. 2005) has examined the response of steel-jacketed columns with grout, epoxy polymers, and various lateral steel reinforcements in order to develop more accurate stress versus strain curves for confined concrete.

The literature is replete with proposed confined concrete stress versus strain models for concrete confined by carbon fiber-reinforced plastics or glass fiber-reinforced plastics (Hoshikuma et al. 1997; Mirmiran and Shahawy 1997; Hosotani and Kawashima 1999; Daudey and Filiatrault 2000; Karabinis and Rousakis 2001; Li et al. 2003; and Li and Fang 2004).

C6.5.2.2 Reinforcing Steel Stress–Strain Curves These are taken from the POLB *Wharf Design Criteria* (2012).

C6.5.2.3 Prestressing Steel These are taken from the POLB *Wharf Design Criteria* (2012).

C6.6 MODELING

C6.6.2 Moment–Curvature Analysis Much of this is taken from the POLB *Wharf Design Criteria* (2012).

C6.6.2.1 Moment–Curvature Curve Idealization: Method A The idealized plastic moment capacity for typical concrete piles corresponds to the section moment associated with an extreme concrete fiber strain of 0.004, as shown in Fig. 6-4 of the provisions. Typically, the M-ϕ curve peaks around 0.004, has a reduction in moment, and peaks again, depending on confinement, spalling of concrete cover, and strain hardening of reinforcement. If the second peak on the curve is less than the idealized M_p value, the moment at the lower second peak should be taken as M_p. However, for capacity-protection analysis, the moment at the higher peak should be used for M_p. The elastic portion of the idealized M-ϕ curve passes through the curvature at the first reinforcing bar yield of the section or when concrete strain equals 0.002, whichever occurs first, and extends to meet M_p.

C6.6.2.2 Moment–Curvature Curve Idealization: Method B For other M-ϕ curves, the moment–curvature relationship may not exhibit the dramatic reduction in section moment capacity if spalling of the concrete cover is precluded. This result is applicable for partial moment connections, connections with external confinement, and hollow pipe piles. For these types, an equal area approach is permitted. For this approach, the elastic portion of the idealized M-ϕ curve should pass through the point marking the first reinforcement bar yield or when $\varepsilon_c = 0.002$, whichever comes first (ϕ_{yi}, M_y). The idealized plastic moment capacity is obtained by balancing the areas between the actual and the idealized M-ϕ curves beyond the first yield point, as shown in Fig. 6-5.

C6.6.3 Plastic Rotation The modified curvature approach presented in this standard conservatively accounts for large

differences between the yield moment and the nominal moment of the cross section.

C6.6.4 Plastic Hinge Length

C6.6.4.1 In-Ground Plastic Hinge Length For in-ground hinges, the plastic hinge length depends on the relative stiffness of the pile and the foundation material. The plastic hinge length in Eq. (6-12) is taken from the POLB *Wharf Design Criteria* (2012) and is the maximum permitted length for calculation of strain limits that may be increased if justified by experimental testing or detailed finite element modeling of the actual connection that includes consideration of elements such as the actual moment gradient, soil stiffness, and cross-sectional properties.

C6.6.4.2 Plastic Hinge Length for Pile-to-Deck Connections The plastic hinge lengths listed in Table 6-1 when combined with the moment–curvature analysis discussed in Section 6.6.2 and the strain limits discussed in Section 3.9 produce acceptable estimates of the connection rotation.

The behavior of dowelled pile-to-deck connections for both prestressed concrete and pipe piles is very complex and involves the opening of a large crack at the interface, as shown in Fig. C6-1, which induces local bending and shear into the dowels at the interface in addition to tension and compression caused by connection rotation. In addition, although it is easy to measure connection rotation in tests, strain gauges on the reinforcement generally fail in tests at strains in the range of 0.025 to 0.03, so both the contingency level earthquake (CLE) and the design earthquake (DE) strain limits and plastic hinge lengths have been estimated.

Table 6-1 is not intended to be all-inclusive and preclude the use of other connections not presented in this standard, especially when supported by experimental testing and/or detailed finite element analysis that captures the appropriate response of the connection.

C6.6.5 Modeling Pile-to-Deck Connections

C6.6.5.2 Nonrigid Pile-to-Deck Connection For the purpose of modeling the strain penetration at the interface of a prestressed concrete pile, the following approach used by POLB (2012) can be used; see Fig. C6-2.

The effective top of the pile should be located at a distance L_{sp} into the deck to account for strain penetration. This additional length applies only to displacements. The strain penetration of the pile section into the deck should be modeled as a member with properties equivalent to the top of the pile. The member between the strain penetration and the center of gravity of the deck should be modeled as a rigid link. For prestressed concrete piles, the reinforced concrete effective section property should be used for the first 16 in. (0.406 m) of the pile below the soffit of the deck. Below the first 16 in. (0.406 m), the prestressed concrete effective section properties should be used. The maximum moment should be considered to develop at the soffit.

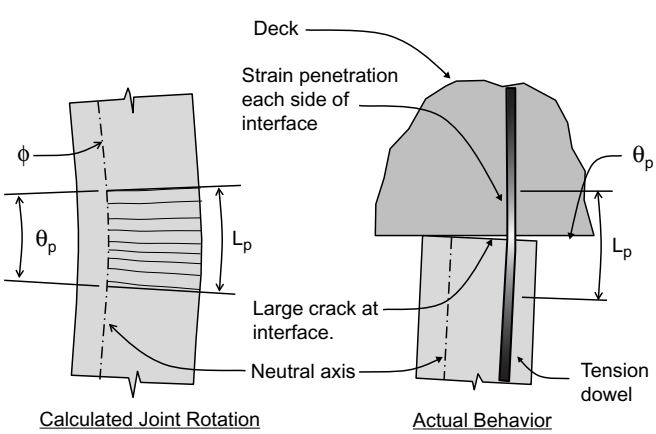

Fig. C6-1. Calculation of plastic rotation

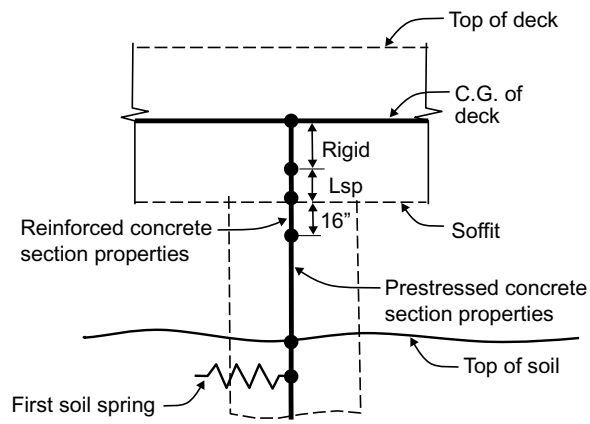

Fig. C6-2. Modeling of strain penetration (POLB)

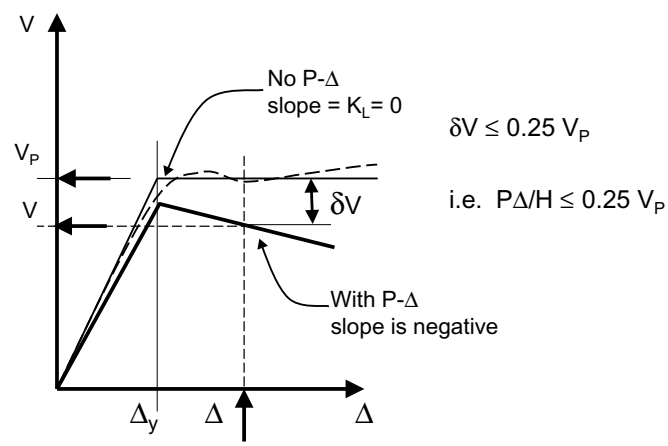

Fig. C6-3. P-delta effects

C6.6.6 Equivalent Pile Depth to Fixity The use of equivalent linear piles is permitted under certain circumstances and is likely to be used during preliminary design stages.

The location of in-ground hinges may be found directly from an analysis where the pile is modeled as a series of inelastic beam elements and the soil is modeled by inelastic Winkler springs. The location of the hinge tends to migrate upward as the pile yields at the connection. Thus, it is important that its location be determined by inelastic analysis, because the location is not accurately predicted by elastic analysis.

C6.6.7 Seismic P-Delta Effects The purpose of this formula is to provide stability in the inelastic condition with a 25% reduction caused by P-Δeffects, as shown in Fig. C6-3. The equation is the same as the one in MOTEMS (California State Lands Commission 2010) with the terms rearranged.

C6.7 CAPACITY ANALYSIS

C6.7.2 Nonlinear Static Pushover Analysis This method incorporates effective section properties and soil deformation

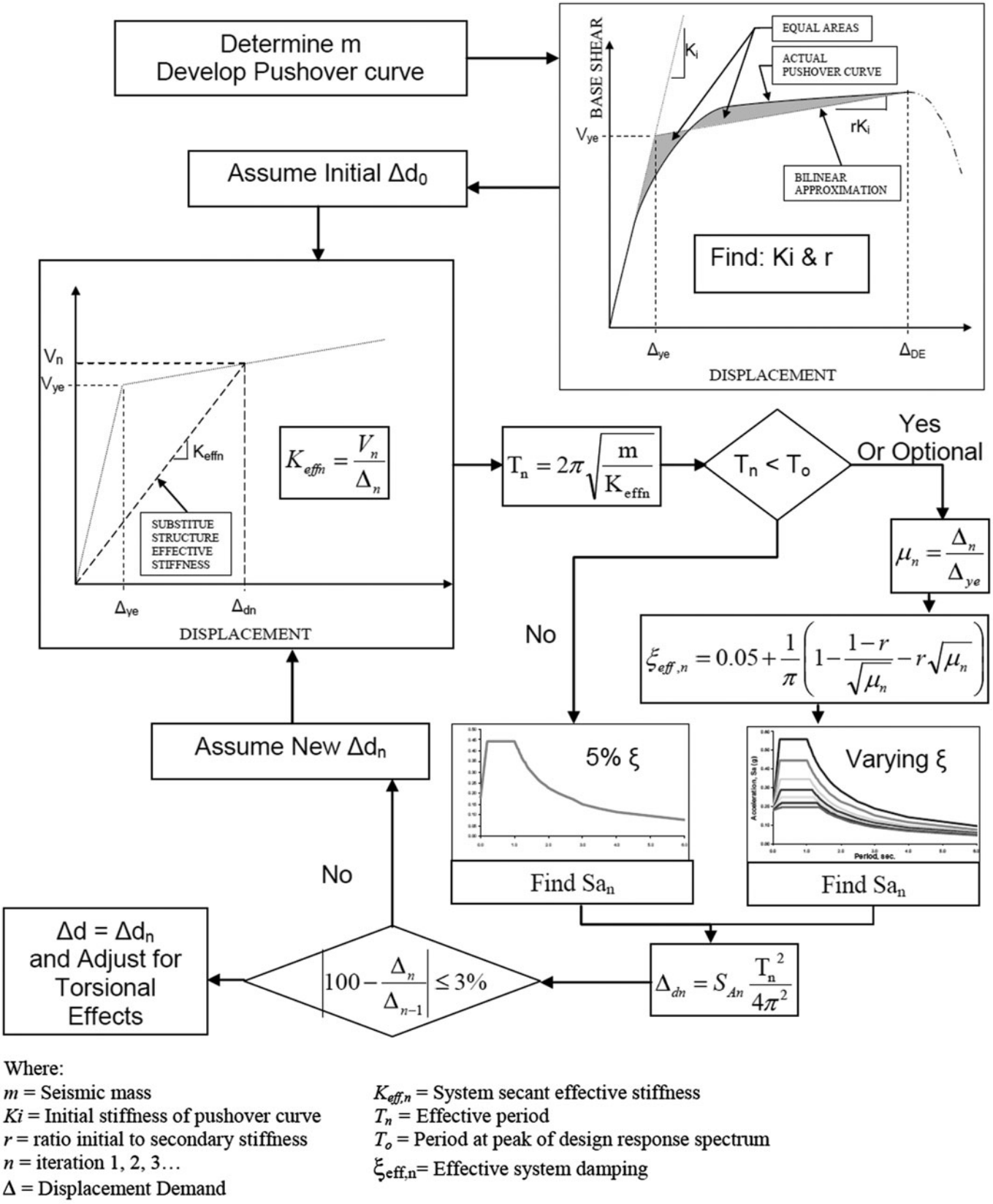

Fig. C6-4. Flow chart for substitute structure method

Source: Courtesy of Marc Percher; reproduced with permission.

into the total displacement capacity of the pile. The results from the pushover analysis provide the displacement capacities for operating level earthquake (OLE), CLE, or DE earthquake levels, as well as the tools for the substitute structure and nonlinear time history analysis methods. For the purpose of determining displacement demand for a specified limit state, the pushover curve may be approximated by a bilinear response, as illustrated in Fig. 6-7 of the provisions.

C6.8 DEMAND ANALYSIS

C6.8.2 Modal Response Spectrum Analysis Modal response spectrum analysis is an elastic method that may be used for structures with elastic demand displacements. Response spectrum analysis provides a simple method for preliminary design and should match results from force-based methods (Chapter 5).

Soil springs defined as elastoplastic should be adjusted based on the secant stiffness approach. This adjustment may be performed iteratively by determining the demand displacement and resulting displacement at each soil spring, then decreasing the spring initial stiffness to match the displacement found at the spring.

The method may also be used for analysis of structures with multimodal response using the secant stiffness determined from a pushover analysis in an iterative approach similar to that shown in Fig. C6-4.

C6.8.3 Nonlinear Static Demand Analysis The substitute structure method presented herein is a nonlinear static demand analysis methodology that is widely in use within the ports community and has been incorporated into the California Building Code (California State Lands Commission 2010). Similar equivalent linearization techniques are presented in the design codes for the Port of Los Angeles (2010) and the Port of Long Beach (2012).

The substitute structure method employs an iterative process that uses a design spectrum with effective secant stiffness (k_{eff}) at the response displacement to determine the displacement demand for each iteration, Δ_n. Fig. C6-4 represents a flow diagram for the substitute structure method adapted from the California Building Code (California State Lands Commission 2010).

Because the substitute structure method is iterative, designations given in this section for values that are found through iteration are stated with a subscript of n representing the current iteration or (n–1) representing the previous iteration. A solution error tolerance of 3% is typically considered acceptable.

The substitute structure approach is generally a single-mode, single-direction, used analysis to analyze a typical bent or section, though it can also be extended to complex 3D models with pushover forces in two dimensions.

Where required, an equivalent elastic damping representing the combined effects of elastic and hysteretic damping should be introduced. This damping acts to scale the response spectrum, resulting in decreased accelerations and may be advantageous for analysis of structures with effective periods on the negative sloped portion of the design spectra; therefore, it is acceptable, though not required, to use this method where $T > T_o$.

Eq. (6-16) is adopted from MOTEMS (California State Lands Commission 2010) and is based on work by Priestley, Seible, and Calvi (1996). The value r is a constant of the pushover curve and is found by solving for a bilinear approximation that has the same initial stiffness as the pushover curve and equal areas above and below the pushover curve. Displacements beyond ultimate strength are typically ignored and often cannot be determined using industry standard design software.

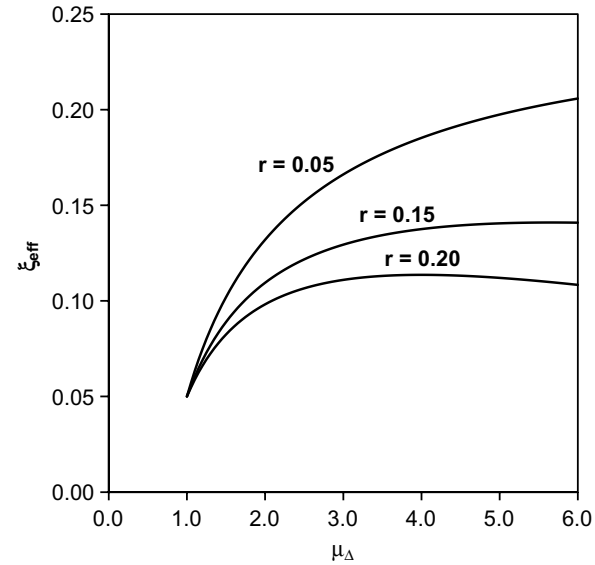

Fig. C6-5. Relation of ductility and effective damping for various *r* values

A practical method for solution is to assume an intersection at the DE strain and determine an effective yield point that results in equal areas. For connections detailed with high ductile capacity, such as those provided in Chapter 7, the OLE, CLE, and DE strain capacities are likely to occur well into the secondary slope of the pushover curve. Fig. C6-5 provides ductility and damping relationships for typical r values. Higher r values lead to lower damping and therefore higher accelerations at the same ductility level. Values of r beyond those shown may be the result of a brittle system response; therefore, connection ductility should be verified.

C6.8.4 Nonlinear Time History Analysis Nonlinear time history analysis accounts for both demand and capacity analysis simultaneously (Blandon 2007) for detailed examples of nonlinear analyses of connections, piles, and soil).

C6.9 DEMAND LOADS ON PROTECTED ELEMENTS

C6.9.2 Pile–Deck Joint Capacity Protection In areas of low seismic risk, other lateral service loads such as waves and mooring may be significantly greater than the elastic seismic forces, and the deck may be significantly stronger than the elastic seismic forces. In the event that elastic seismic forces and other lateral forces are similar in magnitude, the pile overstrength forces may exceed the nominal capacity of the deck. Nominal material properties may be used to determine the plastic hinge mechanism forces needed to protect the deck. Note that 100% of the pile live load is used to calculate pile overstrength forces to prevent localized deck damage at heavily loaded piles.

C6.9.3.2 Concrete Piles This method is based on the modified UCSD three-parameter model (Priestley et.al. 2007) with separate contributions to shear strength from concrete to obtain the nominal shear strength, V_n.

C6.10 REFERENCES

Blandon, C. (2007). "Seismic analysis and design of pile supported wharves." Ph.D. thesis, University of Pavia, Italy.

California State Lands Commission. (2010). *California code of regulations*, Part 2, California Building Code, Chapter 31F, Title 24, commonly referred to as the Marine Oil Terminal Engineering and Maintenance Standards (MOTEMS), California State Lands Commission, Sacramento, CA.

Daudey, X., and Filiatrault, A. (2000). "Seismic evaluation and retrofit with steel jackets of reinforced concrete bridge piers detailed with lap-splices." *Can. J. Civil Eng.*, 27, 1–16.

Ferritto, J., Dickenson, S., Priestley N., Werner, S., Taylor, C., Burke D., et al. (1999). *Seismic criteria for California marine oil terminals*, Vols. 1 and 2, Technical Report TR-2103-SHR, Naval Facilities Engineering Service Center, Port Hueneme, CA.

Hoshikuma, J., Kawashima, K., Nagaya, K., and Taylor, A. W. (1997). "Stress–strain model for confined reinforced concrete in bridge piers." *J. Struct. Eng.*, 123(5), 624–633.

Hosotani, M., and Kawashima, K. (1999). "A stress–strain model for concrete cylinders confined by both carbon fiber sheets and hoop reinforcement." *Civil Eng.*, Japan Society of Civil Engineers, 43, 25–42.

Joen, P. H., and Park, R. (1990). "Flexural strength and ductility analysis of spirally reinforced prestressed concrete piles." *PCI J.*, 35(4), 64–83.

Karabinis, A. I., and Rousakis, T. C. (2001). "Carbon F.R.P. confined concrete elements under axial load." *Proc., Int. Conf., FRP composites in civil engineering*, Vol. I, J.-G. Teng, ed. Elsevier Science, Essex, U.K., 309–316.

Li, Y.-F., and Fang, T.-S. (2004). "A constitutive model for concrete confined by steel reinforcement and carbon fiber reinforced plastic sheet." *Struct. Eng. Mech.*, 18, 21–40.

Li, Y.-F., Lin, C.-T., and Sung, Y.-Y. (2003). "A constitutive model for concrete confined with carbon fiber reinforced plastics." *Mech. Mater.*, 35, 603–619.

Li, Y. F., Chen, S. H., Chang, K. C., and Liu, K. Y. (2005). "A constitutive model of concrete confined by steel reinforcements and steel jackets." *Can. J. Civil Eng.*, 32, 279–288.

Mander, J. B., and Priestley, M. J. N. (1988). "Observed stress–strain behavior of confined concrete." *J. Struct. Eng.*, 114(8), 1827–1849.

Mirmiran, A., and Shahawy, M. (1997). "Behavior of concrete columns confined by fiber composites." *J. Struct. Eng.*, 123(5), 583–590.

Nataraja, M. C., Dhang, N., and Gupta, A. P. (1999). "Stress–strain curves for steel-fiber reinforced concrete under compression." *Cement Concrete Comp.*, 21(5–6), 383–390.

Port of Long Beach (POLB). (2012). *Wharf design criteria*, Version 3.0, Port of Long Beach, Long Beach, CA.

Port of Los Angeles (POLA). (2010). *Code for seismic design, repair, and upgrade of container wharves,* Port of Los Angeles, Los Angeles.

Priestley, M. J. N., Seible, F., Calvi, G. M. (1996). *Seismic design and retrofit of bridges,* Wiley, New York.

Priestley, M. J. N., Calvi, G. M., Kowalsky, M. J. (2007). *Displacement-based seismic design of structures*, IUSS Press, Pavia, Italy, Chapter 12.

This page intentionally left blank

CHAPTER C7
DESIGN AND DETAILING CONSIDERATIONS

C7.1 INTRODUCTION

C7.1.1 Scope Pier and wharf construction varies throughout the United States. Decks are commonly constructed of cast-in-place and/or precast concrete systems. Piles are most commonly prestressed concrete or steel pipe piles connected to the deck with reinforcement across an interface. In some cases, the body of the pile may be embedded in the deck or welded to a plate that is embedded in the deck. Plumb piles are the focus of this section because they have historically performed better than batter piles in earthquakes. However, batter piles are not prohibited, provided that they are designed per the criteria in this standard. The purpose of this section is to provide supplemental requirements and/or procedures for the following key elements of the seismic design of pier and wharf structures:

a. Determination of where and how inelastic action will occur;
b. Design and detailing of the inelastic zones to ensure that the structure satisfies all of the force, displacement, and compatibility demands of the seismic criteria;
c. Design and detailing of capacity-protected elements to ensure that they remain essentially elastic under the seismic limit state under consideration; and
d. Behavior of pile connections and associated analysis considerations.

C7.2 DEFINITIONS

In all pier and wharf structures, there are pile-to-deck connections. See Fig. C7-1 for an illustration of pile-to-deck connection terms.

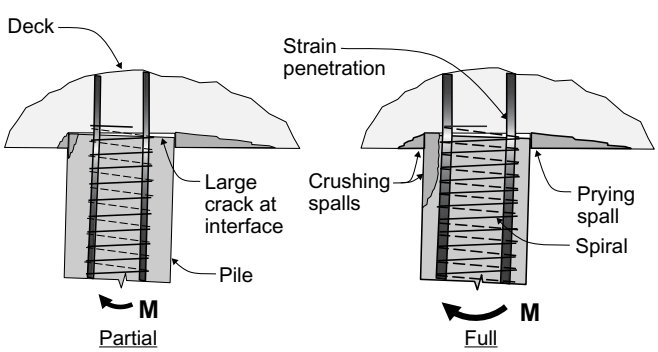

Fig. C7-1. Performance partial versus full moment connections

C7.4 PILE-TO-DECK CONNECTIONS

C7.4.1 Connection Selection In this document, connections are listed according to pile type (e.g., steel pipe pile connections, prestressed concrete pile connections, and other connections).

The selection of the pile-to-deck connection should be based on the relationship among a number of parameters, such as the type of structure (pier or wharf); seismic demand; length of pile; type of pile; soil stiffness; magnitude of other lateral loads, such as waves and mooring; post-earthquake repairability; corrosion; and life-cycle cost. It is not necessary to use the same connection for all piles. Connections may be full moment or partial moment connections as described following.

Examples of full and partial moment connections are shown in Fig. C7-1. Full moment connections have the same strength at the interface as the body of the pile below the interface and, therefore, develop the moment capacity of the pile. For reinforced concrete, this strength is commonly achieved by the use of a constant amount of longitudinal steel that passes through and is adequately developed on either side of a potential plastic hinging site. For steel pipe piles, a full moment connection is commonly achieved by embedding the pile into the deck a sufficient distance to force a hinge to occur in the body of the pile. Tests on prestressed concrete dowelled connections (Roeder et al. 2001; Priestley and Sritharan 2004; Restrepo et al. 2007; Jellin 2008; Krier et al. 2008; Stringer 2010) indicate that the majority of the rotation at the pile-to-deck connection is concentrated at the interface between the pile and the deck and is attributable to the type of prying action shown in Fig. C7-1. During the cyclical earthquake loading, the gap opens and closes repeatedly, resulting in these events, generally in this order:

a. Tension cracking of the pile;
b. Yielding of the dowels in tension and local bending at the interface;
c. Deck spalling on the tension side of the connection caused by prying;
d. Deck crushing on the compression side of the connection caused by bearing;
e. Pile crushing on the compression side of the pile caused by bearing;
f. Yielding of the spiral, which results in loss of confinement of the concrete core and reduction in lever arm and shear strength; and
g. Dowels buckling and fracturing. This step may be facilitated by dowel shearing as the connection degrades.

Partial moment connections are underreinforced at the interface with respect to the body of the pile. As a result, the inelastic behavior and damage are confined primarily to short lengths of dowel above and below the connection interface as shown.

Externally, the post-earthquake condition of such a connection is likely to be characterized by a single large crack between the pile and deck as the result of tension elongation of the dowel bars. Cover spalling associated with typical plastic hinging is minimized either by limiting demand or by providing external confinement. The lack of cover spalling may, however, lead to a limited rotation capacity. As discussed in detail by Priestley (2003), such connections are excellent for use in bridge-type structures designed using nonlinear elastic (i.e., pushover) analysis. For steel pipe piles, a partial moment connection is commonly achieved by extending dowels into the deck from a concrete plug cast inside the pile.

Table 7-1 of the provisions identifies several types of connections and which ones have strain limits provided in Tables 3-1 to 3-3 of the provisions. The other types of connections are permitted; however, the committee believed that there were not sufficient test data available to provide strain limits that could be used generically for all of these connections.

C7.4.2 Steel Pipe Pile Connections Examples of steel pipe pile connections considered in this standard are shown in Fig. C7-2.

C7.4.2.1 Embedded Pile This connection is usually considered a full moment connection. The provisions for embedded pipe piles are simplified expressions derived from various studies and standards (Marcakis and Mitchell 1980; Stephens and McKittrick 2005; SCDOT (2006). Tests by Stephens and McKittrick (2005) for piles embedded one diameter and loaded in the long direction of a bridge bent cap (i.e., transversely) showed that considerable reinforcement is required to force the hinge in the pipe pile (i.e., to capacity protect the bent cap). The one diameter embedment used in the tests was based on a formula from Marcakis and Mitchell (1980).

The tests also indicated that simple hand calculations were adequate for predicting the nature of the failure (i.e., plastic hinge formation in the pipe pile, crushing of the concrete in the cap beam or tensile yielding in the cap beam reinforcement). The hand models generally did not predict the failure capacity of the bent cap for lightly reinforced bent caps, although they generally did a good job predicting the capacity for heavily reinforced members. The bent caps tested were narrower than pile caps normally used in marine construction and were not tested in the longitudinal direction, which is a common loading for finger pier structures.

Tests indicate that plastic hinge rotations on the order of $4\theta_y$, $8\theta_y$, and $15\theta_y$ provide performance equivalent to the minimal damage, controlled and repairable damage, and life safety protection performance levels, respectively, as defined in Section 2.4.

C7.4.2.2 Concrete Plug This connection and the isolated shell discussed in Section C7.4.2.3 are usually considered partial moment connections. However, it is feasible to develop the moment capacity of the pile with this connection if sufficient reinforcement is provided across the interface.

Provisions for the concrete plug and isolated shell connections are based on the results of tests described in the literature (Park et al. 1983; Silva and Seible 2001). This connection has been shown to achieve remarkable ductility capacity (Park et al. 1983). The connection exhibits excellent behavior with little strength and stiffness degradation. The connection also exhibits a high overstrength capacity because of the enhanced lever arm created by the high bearing stress of pipe shell against the deck, as shown in Fig. C7-3. The plot in Fig. C7-4 shows the difference in expected connection response among three different pile-to-deck connections, the concrete plug, an isolated interface (from Section C7.4.2.3), and reinforced concrete. The model was calibrated using material strengths and geometry from the experimental testing on steel-encased piles with discontinuous casings (Park et al. 1983). The dashed curve (the isolated shell discussed in Section C7.4.2.3) assumes that the steel shell is effective for confinement of the core concrete only, whereas the solid curve (concrete plug) assumes that the steel shell is not only effective at confining the core concrete but is also partially effective in flexure because of end bearing of the shell against the deck soffit. The reinforcing steel was taken to fracture at a strain of 0.06 with an axial load of $0.1f'_cA_g$.

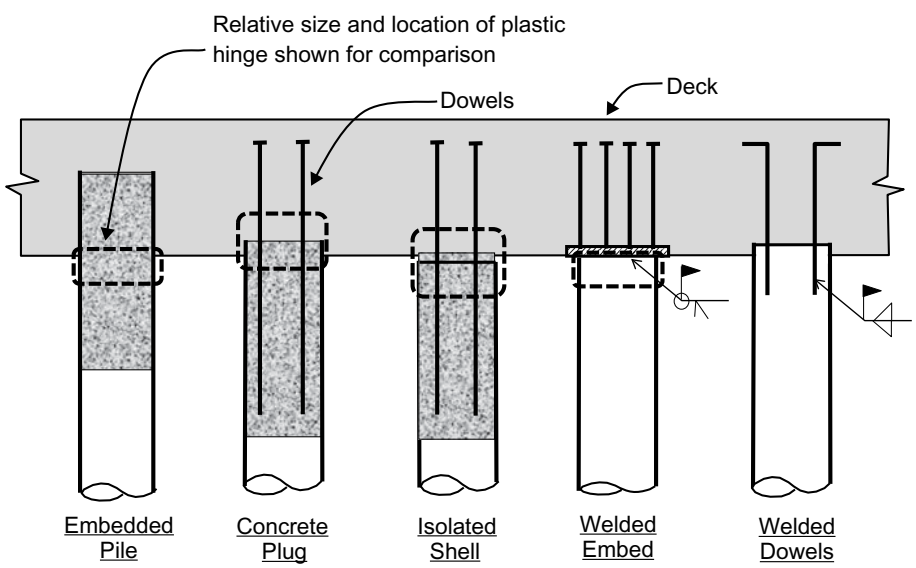

Fig. C7-2. Examples of steel pipe pile connections

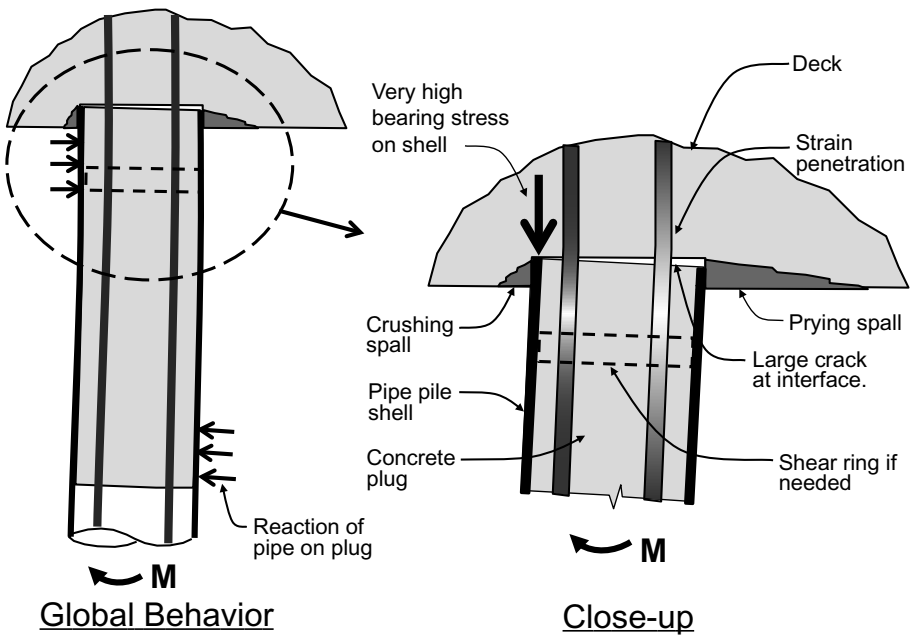

Fig. C7-3. Concrete plug performance

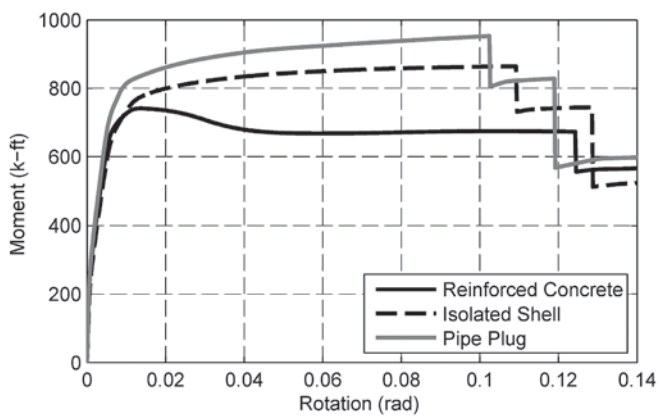

Connection	θ_y	μ_θ	M_p *(kip-ft)*	M_o *(kip-ft)*
Concrete plug 24" × ½" wall pipe (8-#10)	0.0048	21.5	910	1138
Isolated shell 24" × ½" wall pipe (8-#10)	0.0053	20.7	850	1063
Reinforced concrete 24" diameter (8-#10, $\rho_s = 0.02$)	0.005	24.8	740	925

Fig. C7-4. Comparison of concrete plug versus isolated shell and reinforced concrete pile-to-deck connections (no metric conversion provided)

The pipe shell to deck bearing stress in Eq. (7-2) comes from Appendix D of ACI 318 (2008) for the bearing stress under the head of an anchor as limited by the yield strength of the pipe.

C7.4.2.3 Isolated Shell If the pipe pile shell is terminated below the deck or softer isolation material is placed at the interface to prevent bearing of the deck on the pile shell, the effect of pile bearing on the deck need not be considered. The effect of shell confinement on the compression strength of the concrete core should be considered when calculating the overstrength moment. A summary of test results for isolated shell connections is presented in the literature (Park et al. 1983; Silva et al. 1999). Welded shear rings were found to be an effective method of transferring shear from a concrete plug to the pile shell (Gebman et al. 2006).

C7.4.2.4 Welded to Embed A summary of tests on this connection is presented in the literature (Steunenberg et al. 1998). The testing showed little distress in the pile cap with some evidence of bond slip of the embedded anchor bolts. Unless testing indicates otherwise, the following design approach is permitted (this approach produces a full moment connection):

a. Design the plate per AISC (2005) to develop 1.3 times the plastic moment capacity of the pile;
b. Use full penetration butt welds per ANSI/AISC 360-05 (2005) for the pile-to-plate weld; and
c. A minimum eccentricity of 3 in. in design and detailing to account for pile driving tolerances is suggested.

Tests indicate that plastic hinge rotations on the order of $3\theta_y$, $10\theta_y$, and $15\theta_y$ provide performance equivalent to the minimal damage, controlled and repairable damage, and life safety protection performance levels, respectively, as defined in Section 2.4.

C7.4.2.5 Welded Dowels This connection is not permitted if inelastic performance is desired because the presence of the weld creates the potential for brittle fracture of the dowel. Therefore the connection is required to remain elastic in the design earthquake (DE).

C7.4.3 Prestressed Concrete Pile Connections Examples of prestressed concrete pile-to-deck connections considered in this standard are shown in Fig. C7-5.

C7.4.3.1 Pile Buildup Testing by Roeder et al. (2001) indicated that reinforced concrete pile extensions (i.e., pile buildup) developed most of their inelastic deformation as flexural yielding of the reinforced concrete section and they had relatively full hysteresis curves with little deterioration of resistance. Therefore, no special provisions are provided for pile buildup connections because these connections can be designed in accordance with ACI 318 (2008). However, full moment curvature analysis is required for these connections in order to appropriately analyze the structure in accordance with Chapter 6 of this standard.

C7.4.3.2 Extended Strand Joen and Park (1990) tested six pile-cap connections constructed by connecting 15.7-in.-diameter octagonal piles in 36.5 × 36.5 × 78.8-in. pile caps. In three specimens, the pile prestressing steel was exposed and extended into the pile cap. For two tests, the end of the pile was embedded 31.5 in. into the pile cap. The sixth specimen was dowel connected to the pile cap. All of the connection details developed the moment capacity of the pile while exhibiting satisfactory ductile behavior.

C7.4.3.3 Embedded Pile See Section C7.4.2.1 for discussion. Harris and Petrou (2001) tested this connection under constant axial loading and determined that the connection could develop the moment capacity of the pile. The embedded pile creates a discontinuity in the joint that complicates the joint shear calculation.

Tests indicate that plastic hinge rotations on the order of $3\theta_y$, $7\theta_y$, and $10\theta_y$ provide performance equivalent to the minimal damage, controlled and repairable damage, and life safety protection performance levels, respectively, as defined in Section 2.4.

C7.4.3.4 Dowelled A number of issues need to be considered when determining the minimum development length:

a. Required stress in the dowels exceeds the yield strength as a consequence of strain hardening;
b. Influence of tension shift in the pile caused by high shear stress;
c. Development length for the prestressing strands;
d. Maximum moment demand at the top of the pile; and
e. Moment gradient down the pile.

The report recommends a maximum embedment length, because longer embedment could result in moment enhancement of the in-ground plastic hinge of the shoreside piles, which could increase the already critical shear demand. In addition, testing at the University of California San Diego confirmed that the strand development length for 0.6-in. strands can be assumed as 16 in.

The performance of prestressed concrete piles with dowelled connections varies, depending on the amount of reinforcement and the axial load on the pile. This notion is illustrated in tests (Restrepo et al. 2007; Jellin 2008; Krier et al. 2008; Stringer 2010) on 24-in. prestressed concrete dowelled connections for the Port of Los Angeles (POLA 2010) with typical connections using either 8-#10 or 4-#9 bars. The 8-#10 bar connection (referred to by POLA as seismic piles), is used for the short piles

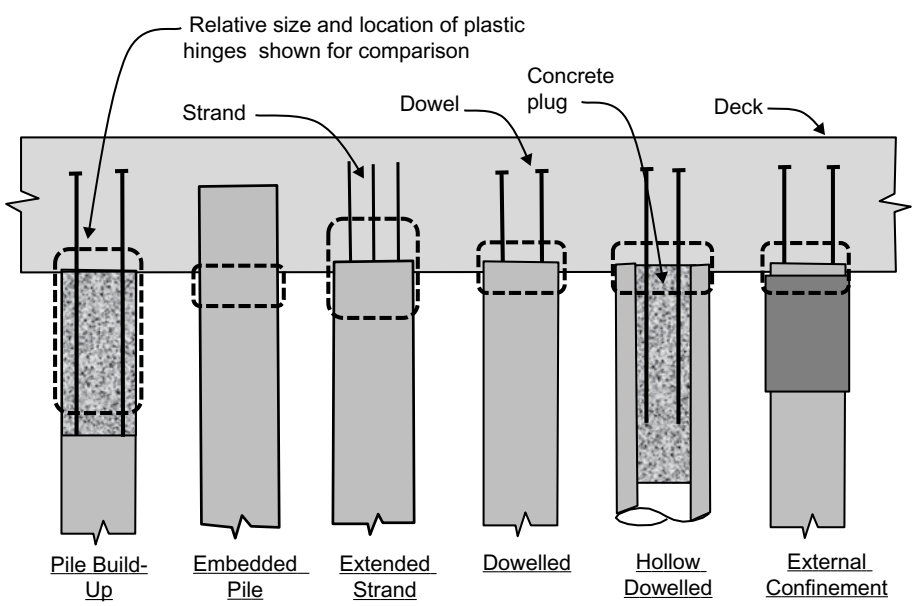

Fig. C7-5. Examples of prestressed concrete pile connections

at the bulkhead with high demand and is a full moment connection that behaves as shown in Fig. C7-1.

The secondary seismic connection (4-#9 bars) is used for longer piles with low seismic demand. In tests of both connections, a large crack developed at the pile–deck interface while a few hairline cracks developed in the piles. The seismic pile performed adequately but exhibited a significant reduction in capacity when the cover spalled at a ductility demand of about 3. POLA limits concrete compression strain in the "secondary seismic pile" to 0.005 in the contingency level earthquake, which is the limit in this document. This limit resulted in minimal damage and a substantial ductility reserve. The plastic hinge length for the seismic pile connection ($L_p = 0.25f_yd_b$) was found to be substantially more than for the secondary seismic pile ($L_p = 0.13f_yd_b$) because of the higher level of damage to the core and interface for the seismic pile. (Restrepo et al. 2007)

C7.4.3.5 Hollow Dowelled Piles Dowels are commonly extended from a concrete plug because of the difficulty of extending reinforcement from the shell into the deck. Depending on the reinforcement, this connection can be either a full or partial moment connection. However, if the connection is too strong, longitudinal cracks may develop in the shell because of splitting forces caused by horizontal reactions of the plug bearing on the shell.

C7.4.3.6 External Confinement Although primarily a retrofit option as described in the literature (Priestley et al. 1996), new construction is permitted to use external confinement as shown in Fig. C7-5. The effect of confinement on pile strength should be considered in the capacity design of the deck. Depending on the reinforcement, this connection can be either a full or partial moment connection.

C7.4.3.7 Isolated Interface The isolated interface connection shown in Fig. C7-6 was developed and tested by researchers at the University of Washington (Jellin 2008; Stringer 2010). The isolated interface connections exhibit similar energy dissipation and secant stiffness as dowelled connections with significantly delayed concrete damage. Test results indicate that the seismic performance of the prestressed concrete dowelled connection (in Section C7.4.3.4) may be modified by isolating the top and edges of the pile using a compressible material and sleeving the dowels. The connection exhibited a first yield at roughly 1.0% rotation (0.010 radian) with 40% to 45% reduction on initial rotational stiffness when compared to a dowelled connection. The connection then slowly gained moment resistance up to about 5% to 5.5% rotation at the peak moment capacity. The connection suffered only minor cracking until spalling of the pile cover concrete initiated at roughly 5% rotation compared to 2% for the concrete dowelled connection. After the peak, there was a rapid drop in resistance caused by deep spalling in the concrete cover. It is postulated that the very close spiral spacing (1″ o.c. for the upper 6″) created a weakened plane leading to the spalling.

C7.4.4 Other Connections

C7.4.4.1 Pinned Connections Pinned connections may be used with pipe piles or prestressed concrete piles. Three commonly used pinned connections are shown in Fig. C7-7. Caltrans (2010) provides details for hinging bridge columns that may be applicable to pier and wharf construction. The use of isolation material sleeves around the dowels, or other means, is permitted.

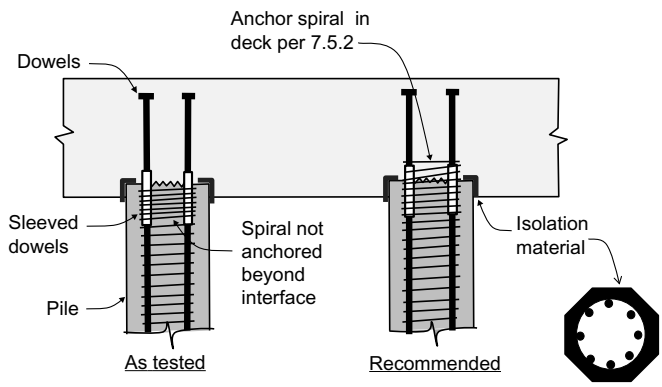

Fig. C7-6. Interface isolation

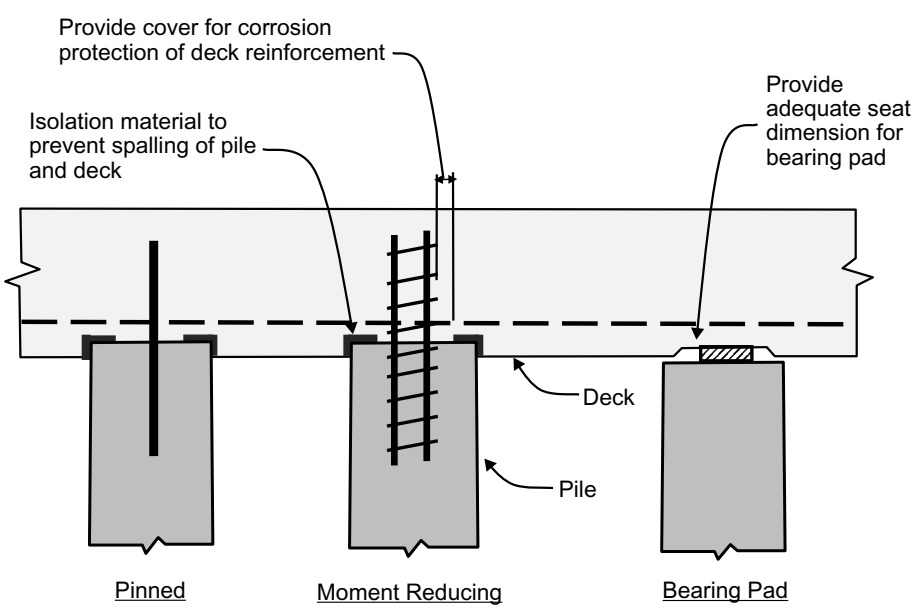

Fig. C7-7. Examples of pinned connections

C7.4.5 Sleeving of Dowels Tests (Jellin 2008; Pang et al. 2008; Stringer 2010) on connections with and without sleeved (debonded) dowels indicated that the effect of sleeving on the performance of the connection was minimal. Pang et al. (2008) notes that the elastic stiffness of the connections with debonded dowels was less than that of fully bonded dowels, the internal damage to the cap beam was less than that of fully bonded dowels, and the internal damage to the cap beam was less for the debonded dowels, because the dowels were anchored deeper into the cap beam where confinement was greater.

C7.5 PILES

C7.5.1 Confinement A major purpose of this standard is to allow engineers to couple detailed nonlinear structural analysis and moment–curvature analysis to appropriately and economically design and detail plastic hinges in the piles supporting pier and wharf-type structures. The displacement-based procedure used in this standard allows less spiral along the length of the pile because of determined plastic hinge locations and calculated strains that do not exceed the limits presented in Chapter 3.

C7.5.1.1 Confinement for Prestressed Piles The minimum spiral ratio of 0.007 is considered an adequate lower bound but is not intended to control in most cases. Juirnarongrit and Ashford (2003) show that equivalent confinement can be provided by the supporting soil for below-ground plastic hinges in some cases, and this level is deemed added redundancy in this standard.

The location and length of plastic hinges are determined by the design professional, and three pile dimensions above and below each below-ground hinge is intended to account for variations in soil properties not considered by the geotechnical engineer.

The additional requirements for spiral outside the ductile regions are intended to account for variations in soil properties not considered by the geotechnical engineer and pile installation variability not accurately accounted for in the design.

C7.6 JOINT SHEAR

C7.6.1 General Design of pile-to-deck joints may require consideration of single-directional or multidirectional loading.

C7.6.2 Anchored Piles Joint shear provisions for anchored piles are adapted primarily from Priestley et al. (1996), POLA (2010), SCDOT (2006), and Caltrans (2010) and have been simplified to address only round pipe piles and square and round (i.e., octagonal) prestressed concrete piling. Figs. C7-8 through C7-12 present the geometry, load path, and stress elements considered in this section. The average axial vertical stress assumes a 45-degree spread from the pile interface to the centerline of the pile cap or deck. For most cases, the horizontal axial load from the beam or pile cap is taken as zero unless prestress exists in the member.

The strategy used in this standard is to allow the designer to use the spiral as joint shear reinforcement where possible.

C7.6.3 Joint Shear with Fully Embedded Piles No special provisions are provided for fully embedded piles. The embedded piles are confined by their own confinement steel and the surrounding deck or pile cap. The load path for fully embedded piles is greatly different than that assumed for anchored piles.

C7.6.4 Joint Shear in Other Deck Configurations An example of a method to determine joint dimensions for the joint shear calculation is discussed in Section C7.7.7.

C7.7 JOINT DETAILING

C7.7.1 General Surprisingly, little research has been performed on developing design provisions for joint regions of anchored piles, except for the tests mentioned in Section C7.6.2. Transfer of forces in the pile–deck joint region requires careful attention to detail.

C7.7.2 Uncracked Joint Detailing

C7.7.2.1 Minimum Dowel Anchorage for an Uncracked Joint Fig. C7-13 shows three methods of dowel anchorage that are suitable for an uncracked joint region, even though the

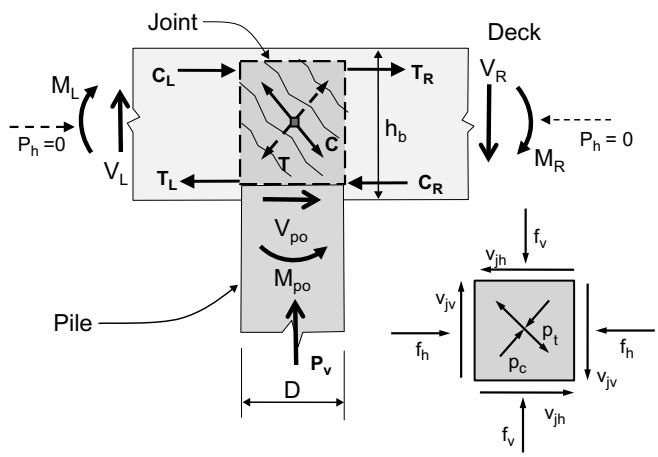

Fig. C7-8. Joint shear stresses in anchored pile-to-deck connections

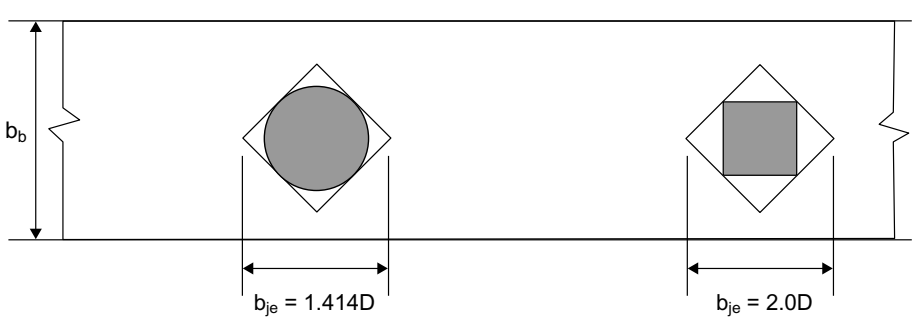

Fig. C7-9. Joint effective widths in anchored pile-to-deck connections

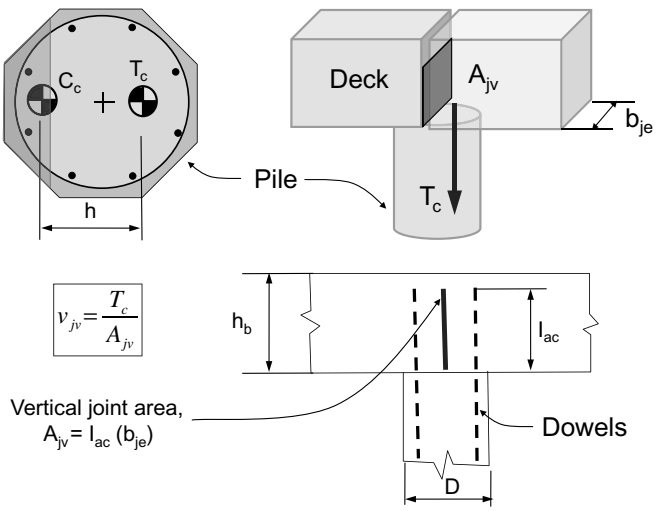

Fig. C7-10. Calulation of joint shear stress, v_{jv}

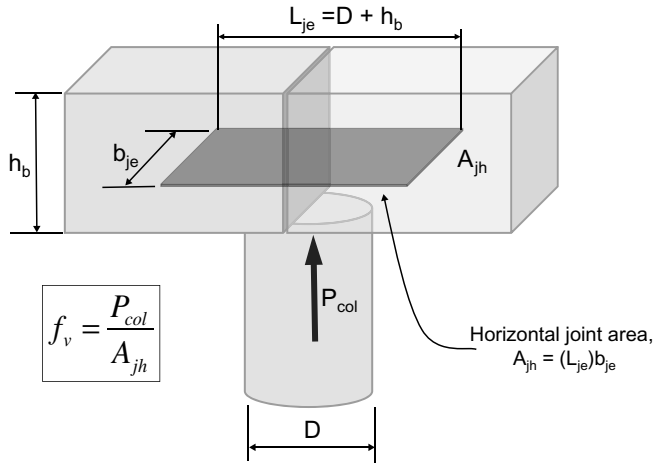

Fig. C7-11. Calculation of vertical stress

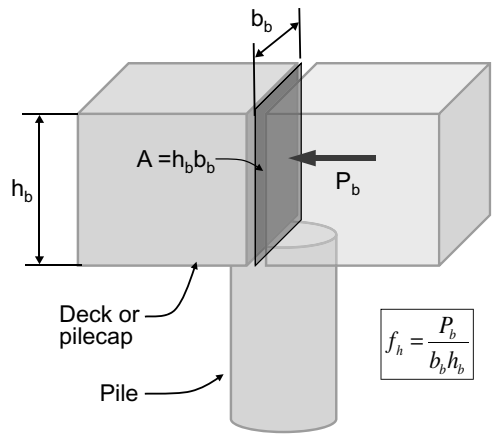

Fig. C7-12. Calculation of horizontal stress f_h

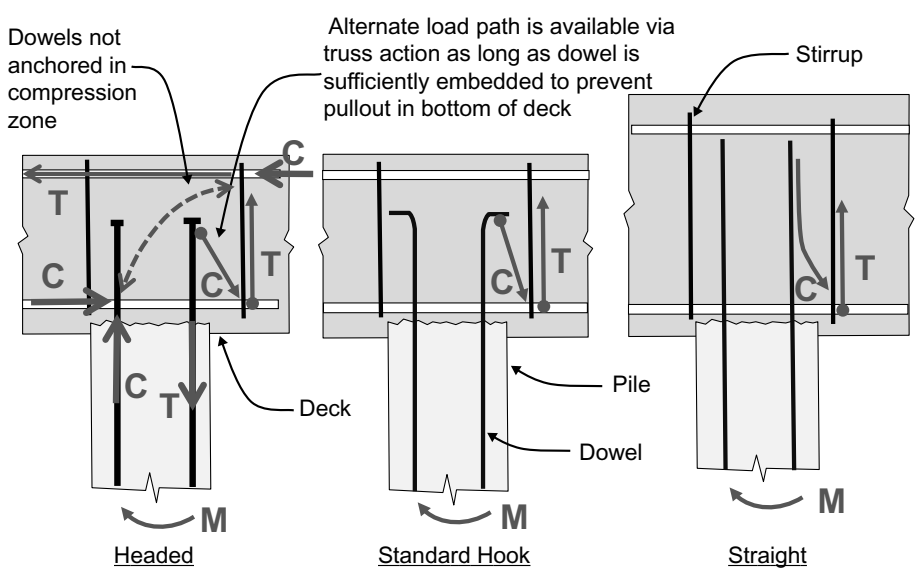

Fig. C7-13. Dowel anchorage with uncracked joint region

dowels are not anchored in the compression zone. The key to this connection is the availability of an alternate load path to develop the dowel through truss action via stirrups to the compression zone. To develop this load path, there must be sufficient adjacent stirrups to complete the tension leg of the truss, and the dowel must be anchored sufficiently to prevent a pullout failure in the deck. Eq. (7-13) is from MOTEMS (California State Lands Commission [2010]).

C7.7.3 Cracked Joint Detailing If joint analysis indicates that the joint region is cracked, dowel bars should be hooked inward or headed to develop the joint as shown in Fig. C7-14 to develop nodes to form the diagonal compression strut through the joint region. The detail with the bond bars requires transfer of force from the dowels to the bond bars in the cracked joint region and would appear to be suspect, but tests by POLA (2010) indicate that the connection performs well and is easy to construct. The possibility of the headed bars punching through the top of the deck as the bars are yielded in compression should be considered above the headed bars for thin decks. The provisions are similar to those of the Port of Long Beach (2012).

C7.7.4 Fully Embedded Piles No special provisions are provided for fully embedded piles. The embedded piles are confined by their own confinement steel and the surrounding deck or pile cap. The load path for fully embedded piles is greatly different than that assumed for anchored piles. The embedded piles create a discontinuity in the deck. Detailing this connection to account for driving tolerances may be difficult.

C7.7.5 Other Joint Configurations Fig. C7-15 shows the joint for a slab-and-cap beam and precast deck panel systems. In both cases, the pile cap acts as a pile extension, using the stirrups to lap the pile dowels and transfer the forces into the joint region. The joint for the deck panel system is considerably smaller than the slab-and-cap beam, and detailing requires care, because the joint may be congested. Fig. C7-16 shows a permitted method of determining joint shear parameters for a precast deck panel system.

C7.7.7 Deck Prying and Spalling Spalling of the deck may occur on either the tension or compression side of the connection, as shown in Fig. C7-1. Prying action on the tension side of

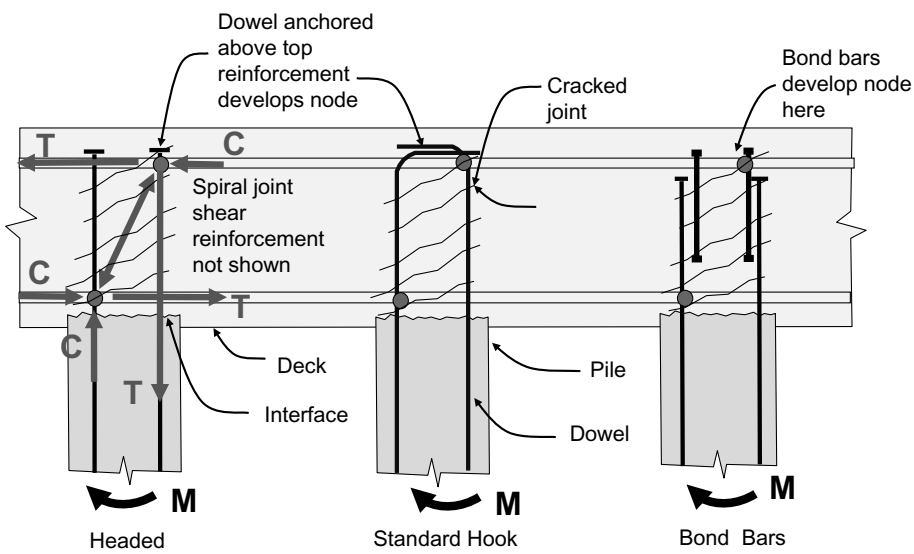

Fig. C7-14. Dowel anchorage with cracked joint region

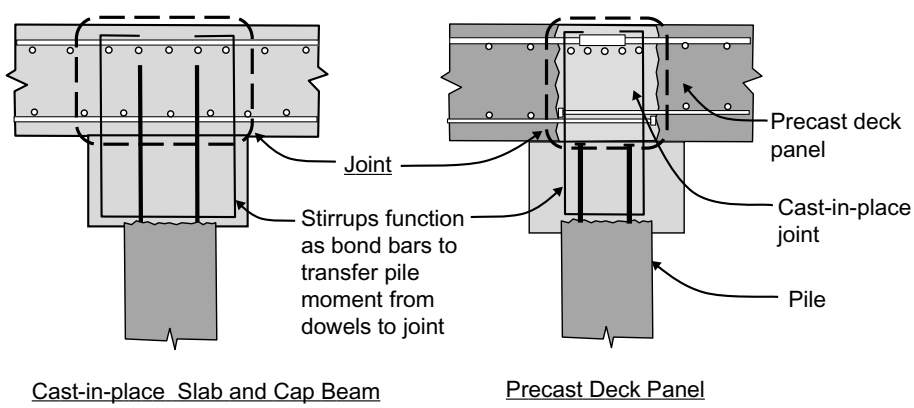

Fig. C7-15. Joint region for other deck configurations

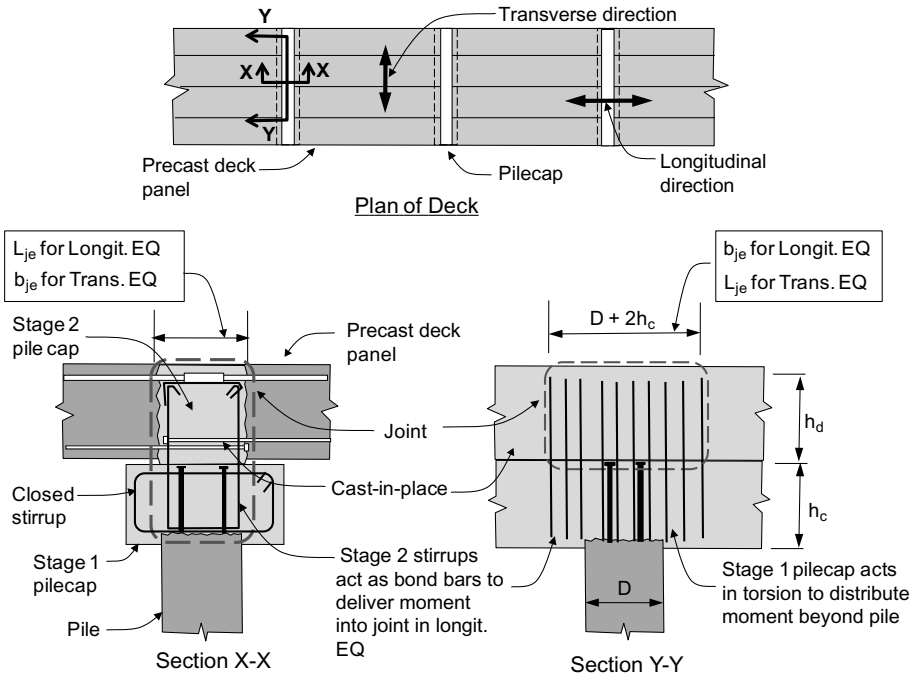

Fig. C7-16. Joint shear parameters for a precast deck panel system

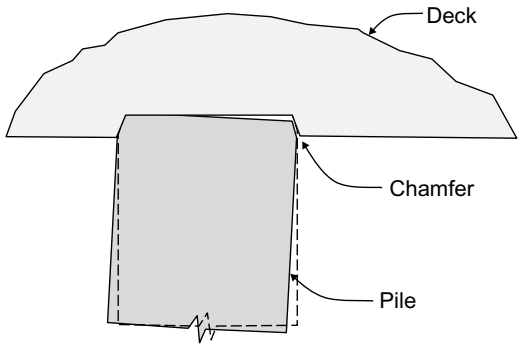

Fig. C7-17. Chamfer pile to minimize deck prying

the connection may result in large "pop outs" on the underside of the deck. The use of isolation material around the pile, or chamfering the edge of the pile, as shown in Fig. C7-17, or other methods to prevent this phenomenon is permitted, provided that shear transfer between the pile and the deck is accomplished.

C7.8 DECKS

C7.8.2 Cast-in-Place Concrete Given that truck traffic is expected on many pier and wharf-type structures, deck design per *AASHTO LRFD Bridge Design Specifications* (2004) is also permitted. In such cases, distribution steel and other detailing contained in the AASHTO provisions are more directly applicable than ACI 318 (2008).

C7.8.3 Precast Concrete Deck Panel Systems The haunched precast concrete deck panel systems, as shown in Fig. C7-18, is the predominant method of pier and wharf construction in the Pacific Northwest and has been adopted in other areas. Variations of this system use precast concrete soffit panels with cast-in-place composite deck slabs. Care is required in detailing the joint region to ensure that the pile moment is developed into the deck.

C7.9 CONSTRUCTABILITY

C7.9.1 Pile Driving Tolerances Pile driving tolerances vary significantly depending on the method of pile driving.

C7.9.2 Pile Cutoffs Pile cutoffs affect the final location of the spiral reinforcement in the pile if the spiral varies throughout the pile to account for the plastic hinge zones. Given the uncertainties associated with pile driving, it is recommended that the engineer extend the spiral an appropriate amount on either side of where it is needed based on calculation to account for piles driven too short or too far (at least two to five pile diameters, depending on the soil and driving conditions expected). The ducts for the dowels at the top of the pile, if used, should also be extended a similar distance. It is recommended that pile cutoff details be indicated on the drawings.

C7.9.3 Pile Buildups Pile buildups are required where the piles are driven too far. It is recommended that pile buildup details be indicated on the drawings.

C7.9.4 Pile Cap Tab-Outs Pile cap tab-outs are field modifications that result from out-of-tolerance piles. An example is shown in Fig. C7-19. The effect of tab-outs on seismic performance should be considered as required. It is recommended that pile cap tab-out details be indicated on the drawings.

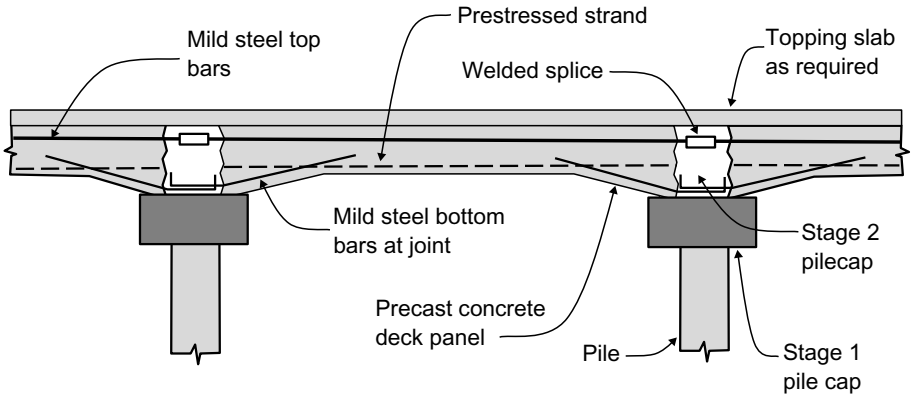

Fig. C7-18. Precast haunched deck panel system

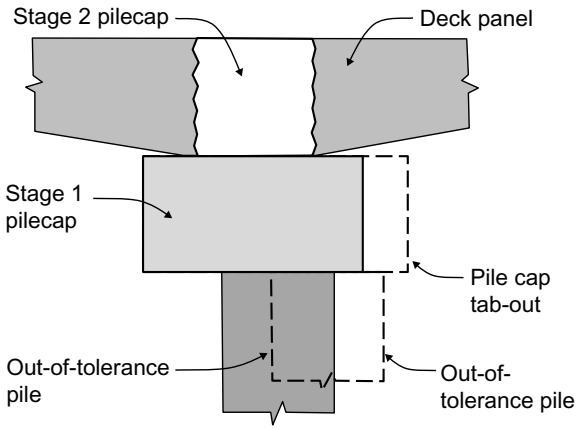

Fig. C7-19. Out-of-position vs. out-of-tolerance piles for Fig. C7-18

C7.10 REFERENCES

American Association of State Highway and Transportation Officials (AASHTO). (2004). *AASHTO LRFD bridge design specifications*, 3rd Ed., American Association of State Highway and Transportation Officials, Washington, DC.

American Concrete Institute (ACI). (2008). *Building code requirements for structural concrete* (ACI 318-08) and commentary (ACI 318R-08), American Concrete Institute, Farmington Hills, MI.

American Institute of Steel Construction (AISC). (2005). *Specification for structural steel buildings*, American Institute of Steel Construction, Chicago.

American National Standards Institute (ANSI)/American Institute of Steel Construction (AISC). (2005). *Seismic provisions for structural steel buildings,* American Institute of Steel Construction, Chicago.

California State Lands Commission. (2010). *California code of regulations*, Part 2, California Building Code, Chapter 31F, Title 24, commonly referred to as the Marine Oil Terminal Engineering and Maintenance Standards (MOTEMS), California State Lands Commission, Sacramento, CA.

California Department of Transportation (Caltrans). (2010). *Seismic design criteria*, Version 1.6, California Department of Transportation, Sacramento, CA.

Gebman, M., Ashford, S., and Restrepo, J. (2006). "Axial force transfer mechanisms within cast-in-steel-shell piles." Report No. UCSD/SSRP-06/16, Department of Structural Engineering, University of California, San Diego.

Harris, K., and Petrou, M. (2001). "Behavior of precast, prestressed concrete pile to cast-in-place pile cap connections." *PCI Journal,* 46(4), 82-92.

Jellin, A. R. (2008). "Improved seismic connections for pile-wharf construction." Masters Thesis, University of Washington, Seattle, WA.

Joen, P. H., and Park, R. (1990). "Simulated seismic load tests on prestressed concrete piles and pile-pile cap connections." *PCI J.,* 35(6), 42–61.

Juirnarongrit, T., and Ashford, S. A. (2003). "Effect of soil confinement in enhancing inelastic behavior of cast-in-hole piles." *Proc., 16th ASCE Eng. Mech. Conf.*, University of Washington, Seattle.

Krier, C. J., Restrepo, J. I., and Blandon, C.A. (2008). "Seismic testing of full-scale pile to deck connections." Report No. SSRP-06/26 Department of Structural Engineering, University of California, San Diego, La Jolla, California

Marcakis, K., and Mitchell, D. (1980). "Precast concrete connections with embedded steel members." *PCI Journal,* 25(4), 88–116.

Pang, J., Steuck, K. P., Cohegan, L., Stanton, J. F., and Eberhard, M. O. (2008). "Rapidly constructible large-bar precast bridge-bent seismic connection." Washington State Department of Transportation Report WA-RD 684.2. Washington State Transportation Center, Seattle, WA.

Park, R. J. T., Priestley, M. J. N., and Walpole, W. R. (1983). "The seismic performance of steel-encased reinforced concrete bridge piles." *Bulletin of the New Zealand National Society of Earthquake Engineering,* 16(2), 123–140.

Port of Long Beach (POLB). (2012). *Wharf design criteria*, Version 3.0, February 29, Port of Long Beach, Long Beach, CA.

Port of Los Angeles (POLA). (2010). *Code for seismic design, upgrade and repair of container wharves,* Port of Los Angeles, Los Angeles , http://www.polaseismic.com/polacode.htm

Priestley, M. J. N. (2003). "Myths and fallacies in earthquake engineering, revisited." The Mallet Milne Lecture, Rose School, Pavia, Italy.

Priestley, M. J. N., and Sritharan, S. (2004). "Seismic testing of a full-scale pile–deck connection utilizing headed reinforcement." Report No. TR-98/14, University of California at San Diego.

Priestley, M. J. N., Seible, F., and Calvi, G. M. (1996). *Seismic design and retrofit of bridges,* John Wiley & Sons, Inc., New York.

Restrepo, J. I., Yin, P., Jaradat, O. A., and Weismair, M. (2007). "Performance of new pile–deck connections under earthquakes." *Ports 2007: 30 years of sharing ideas: 1977 to 2007,* American Society of Civil Engineers, Reston, VA, 1–10.

Roeder, C. W., Graff, R., Soderstrom, J. L., Yoo, J. H. (2001). "Seismic performance of pile–wharf connections." Pacific Earthquake Engineering Research Center, PEER Report 2002/07, College of Engineering, University of California, Berkeley, CA, December.

Silva, P. F., and Seible, F. (2001). "Seismic performance and evaluation of cast-in-steel-shell (CISS) piles." *ACI Structural Journal*, 98(1), 36–49.

Silva, P. F., Sritharan, S., Seible, F., and Priestley, M. N. (1999). "Full-scale test of the Alaska cast-in-place steel shell three column bridge bent." Final report UCSD SSRP-98/13, University of California, San Diego, La Jolla, CA. Sponsoring agency: Federal Highway Administration, Report No. FHWA-AK-RD-99-02.

South Carolina Department of Transportation (SCDOT). (2006). *Seismic design specifications for highway bridges,* South Carolina Department of Transportation, Columbia, SC.

Stephens, J. E., and McKittrick, L. R. (2005). "Performance of steel pipe pile-to-concrete bent cap connections subject to seismic or high transverse loading: Phase 2." Civil Engineering Department, Montana State University, Report No. FHWA/MT-05-001/8144, March, Bozeman, MT.

Steunenberg, M., Sexsmith, R., and Stiemer, S. (1998). "Seismic behavior of steel pile to precast concrete cap beam connections." *Journal of Bridge Engineering,* 3(4), 177–185.

Stringer, S. J. (2010). "Seismic performance of improved damage resistant pile to wharf deck connections." Masters Thesis, University of Washington, Seattle, WA.

This page intentionally left blank

CHAPTER C8
ANCILLARY COMPONENTS

C8.1 INTRODUCTION

C8.1.1 Scope Nonseismic lateral design criteria and considerations are not discussed in this standard but should be considered in accordance with governing codes and standards. For areas of low seismic risk or in areas of high winds, nonseismic criteria may control the lateral design. Local authorities having jurisdiction, such as local fire departments, may enforce more stringent design requirements.

C8.4 GENERAL DESIGN REQUIREMENTS

C8.4.1 Design Criteria Although performance-based design methods are encouraged for structures in high seismic regions, it is acceptable to use any design method in ASCE 7 (2005), provided that it meets or exceeds local requirements. Force-based methods or performance-based methods are acceptable.

C8.4.4 Component Interaction Components that may fail and adversely affect the performance of other components must be designed to the more stringent criterion. For example, if an insignificant component, such as a light tower, is located near a critical component, such as a series of pipelines, the tower must be designed not to adversely affect the performance of the pipelines.

C8.4.5 Design Motions To minimize engineering effort, components may be designed using simplified, conservative criteria. For example, if the response at a support is known not to exceed 1 g but would require significant engineering effort to determine the exact response, a designer may opt to design the supports for conservative accelerations of 1 g or larger.

Although there may be cases where the response of the wharf is not significant to the component response, the motion of the wharf deck supporting the component is usually required.

C8.4.6 Relative Movements A pipeline system may require an elastic analysis using the deflection from the global seismic analysis.

C8.5 COMPONENT-SPECIFIC DESIGN REQUIREMENTS

C8.5.1 Pipelines For a complete treatise on the seismic demand of petroleum and firewater pipelines on piers and wharves, see Chapter 6 and the Appendix of FEMA (2003).

A design displacement that has been used is 200% of the calculated design displacement for critical pipelines and 150% for noncritical pipelines.

If there is a risk of liquefaction as determined in accordance with Chapter 8 of this standard, its effect on the landside support capacity and displacement should be considered.

C8.5.2 Container Cranes

C8.5.2.1 Seismic Mass The crane mass should be included when the crane–wharf interaction results in significant additional lateral loading on the wharf foundation. This condition occurs when

a. The dynamic response of the crane increases the wharf response, and
b. There is significant crane mass near the wharf. There is significant crane mass near the wharf when cranes are closely spaced along the wharf, when a large amount of stability ballast is provided low in the crane structure, or both.

Studies indicate that

a. When the crane period is about twice that of the wharf, the crane counteracts the movement of the wharf and reduces the wharf displacement. For operations, to meet deflection and comfort requirements, the typical modern jumbo crane has a period of 3 s parallel to the wharf and 1.5 s perpendicular to the wharf. Periods during earthquakes can be changed using isolation systems. Isolation systems typically begin operating and affecting the crane's dynamic behavior after a set inertial load develops.
b. Dampers in the crane structure reduce crane response and its effect on the wharf structure. Cranes with added dampening may still increase wharf displacement.
c. Regardless of crane period, during the initial seismic wharf motions, a crane counteracts the wharf movement, reducing the initial wharf response. The crane response typically does not become significant for 5–10 s of shaking.

C8.5.2.2 Crane Performance

Studies indicate that

a. Larger, heavier, and more stable modern container cranes are more susceptible to damage during earthquakes than smaller, lighter, and less stable cranes typical of earlier construction.
b. Modern jumbo A-frame cranes, cranes capable of servicing 22-container-wide ships weighing more than 1200 t, and cranes that have rail gauges of 100 ft or more that are designed in accordance with the typical pre-2005 criteria will probably experience significant damage in a moderate earthquake, the operating level earthquake (OLE), and may collapse in a major earthquake, the contingency level earthquake (CLE), or the design earthquake (DE).
c. New crane seismic design criteria that significantly improve the seismic performance of a container crane result in little additional cost to crane structure. New criteria improve

crane performance in one of three ways: requiring the portal frame to resist the crane tipping load, designing the portal frame to be seismically ductile, or providing isolation.

The requirements of this standard are minimum requirements to ensure safety. More stringent requirements are recommended and are necessary to ensure that a crane is operational or to require minor repairs after the OLE, CLE, or DE. More stringent criteria are now being specified in crane specifications.

Stakeholders should be aware of the seismic risk and are encouraged to

a. Include seismic performance requirements in their crane specifications when procuring new cranes, and
b. Consider the performance of existing cranes.

C8.5.2.3 Crane Rail System It is less expensive to repair localized rail damage after an earthquake than to design the rail system for the seismic forces.

To facilitate repairs, a rail trench can be made wider at the expansion joints to allow for adjustments to correct for relative movements between wharf sections.

The cost of repairing vertical displacement of a rail support varies significantly, depending on the type of support structure. Rails must be nearly level to avoid excessive warping of the crane structure and permit almost even bearing across the wheel tread. If repairs are costly, it may be worthwhile to design the rail support for little or no vertical displacement.

Repairing the rail gauge varies, depending on the type of support structure. Limited adjustment is available in the rail clips. Relocating rails can be costly. Waterside and landside rail support structures are usually connected to maintain gauges, particularly if soil pressures are expected to cause relative movements between the support structures.

C8.5.2.4 Conductor Bar and Power Cable Trenches To facilitate repairs, the power trench can be made wider at expansion joints to allow for adjustments to correct for relative movements between wharf sections.

C8.5.3 Marine Loading Arms

C8.5.3.1 Introduction The use of the word "loading" in the name marine loading arm is by tradition only; many terminals use their arms for both loading and unloading, or for unloading only.

A loading arm consists of five main components, as shown in Fig. C8-1: a riser, inboard arm assembly, outboard arm assembly, triple swivel assembly, and counterweight system.

Swivels in the system allow the arm to move in three-dimensional space and follow the movements of the ship as it rises or falls with change of draft or change in tide. The arm can also slew, or rotate, in the horizontal direction to allow for vessel motions up and down the pier or to account for the fact that the ship does not always perfectly align itself with the loading arm when it maneuvers itself against the berth. The arm also allows some perpendicular motion of the vessel away from the berth to account for different manifold setback distances and a limited amount of elongation in the ship's mooring lines.

The counterweight system, attached to the back side of the inboard arm, is designed such that the arm is balanced when it is empty. Without this balancing, it would require large forces to move the arm when connecting it to the ship or returning it to the stored position after cargo transfer is complete.

C8.5.3.2 Nonoperating Position Marine loading arms located on the deck of pile-supported wharves and pier structures experience the seismic base motion of the supporting structure. The base structure acts to filter and modify the earthquake ground motion and impart its own response as input motion for the supported loading arms.

"Floor" or deck response spectrum curves are usually developed for use in the design of loading arms. The response spectra adopted for design are normally modified using the peak-broadening process of ASCE 4 (1998) to account for uncertainties in the dynamic properties of the site oil, as well as the primary and secondary structural systems.

Loading arms have traditionally been structurally and mechanically designed according to the relevant provisions of the *Design*

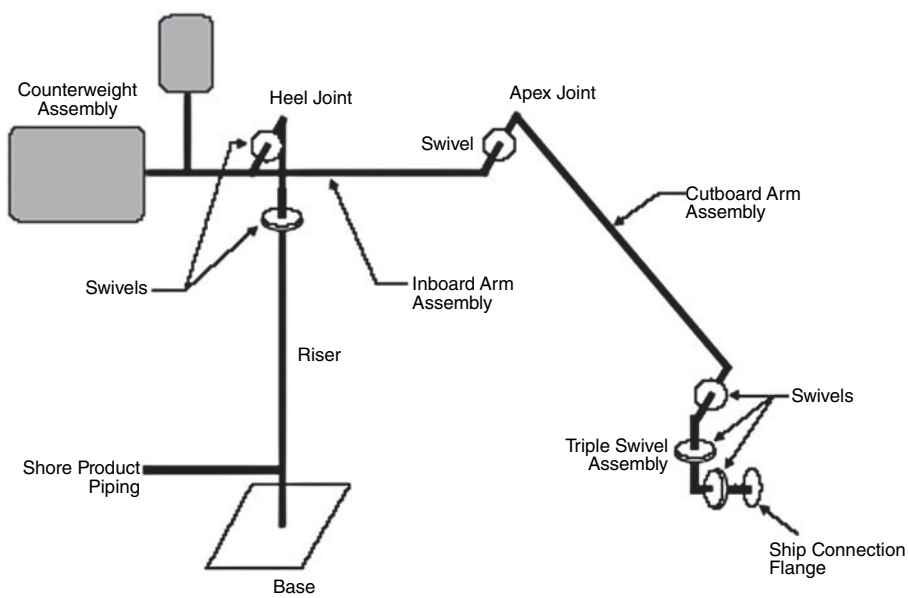

Fig. C8-1. Marine loading arm

and Construction Specification for Marine Loading Arms, which is maintained and published by the Oil Companies International Marine Forum (OCIMF 1999). OCIMF uses a working stress-based design criteria. Conventional OCIMF design practice, unless otherwise specified by the facility owner, is to consider earthquake loads to act on the arm only while it is in the stored, nonoperating position. The earthquake analysis considers loads in the plane perpendicular and parallel to the wharf or pier face. Vertical seismic load effects are also considered.

Since a loading arm in the stored position does not contain fluid, it is treated as a nonbuilding-like steel structure, whereby its primary load-carrying components are designed per ANSI/AISC (2002), rather than ASME B31.3 (1998).

C8.5.3.3 Fully Operational Position ASME B31.3 (1998) is used for design of structural components that are under pressure and filled with fluid during operating conditions (e.g., for arms connected during cargo transfer).

C8.6 REFERENCES

American Society of Civil Engineers (ASCE). (1998). *Seismic Analysis of Safety-Related Nuclear Structures*, ASCE 4-98, American Society of Civil Engineers, Reston, VA.

American Society of Civil Engineers (ASCE). (2005). *Minimum design loads for buildings and other structures*, ASCE/SEI 7-05, American Society of Civil Engineers, Reston, VA.

American Society of Mechanical Engineers (ASME). (1998). *Process piping*, ASME B31.3, American Society of Mechanical Engineers, New York, NY.

American National Standards Institute (ANSI)/American Institute of Steel Construction (AISC). (2002). *Seismic provisions for structural steel buildings*, ANSI/AISC 341-02, American Institute of Steel Construction, Chicago.

Federal Emergency Management Agency (FEMA). (2003). *NEHRP recommended provisions for seismic regulations for new buildings and other structures (FEMA 450)*, Part 1, Provisions, Washington, DC.

Oil Companies International Marine Forum (OCIMF). (1999). *Design and construction specification for marine loading arms,* 3rd Ed., Witherby, London.

This page intentionally left blank

INDEX

Page numbers followed by *e*, *f*, and *t* indicate equations, figures, and tables, respectively.

ancillary components: component-specific design requirements, 33–34, 71–73; design requirements, 33, 71; marine loading arm, 72*f*
axial pile performance, 10, 47–48
batter piles, 8
capacity analysis: displacement-based design, 19, 54, 56; force-based design, 12, 51–52
capacity protection, 7
constructability, 31, 67
cyclic degradation potential, 9, 44
decks, 31, 67, 67*f*, 68*f*
demand analysis: displacement-based design, 19–21, 20*f*, 55*f*, 56, 56*f*; force-based design, 11–12, 51
demand loads on protected elements, 21–23, 22*f*, 56
design, displacement-based, 5; capacity analysis, 19, 54, 56; demand analysis, 19–21, 20*f*, 55*f*, 56, 56*f*; demand loads on protected elements, 21–23, 22*f*, 56; inelastic material properties, 16–18, 17*t*, 53; modeling, 18–19, 18*f*, 19*t*, 53–54, 54*f*; overview, 16
design, force-based, 5; capacity analysis, 12, 51–52; demand analysis, 11–12, 51; modeling, 12, 12*t*, 51; seismic response coefficient, 12*t*
design approach, 41–42
design classifications, 3, 37
design considerations: constructability, 31, 67; decks, 31, 67, 67*f*, 68*f*; joint detailing, 29–31, 29*f*, 30*f*, 64, 66–67, 66*f*, 67*f*; joint shear, 28–29, 64, 64*f*, 65*f*; piles, 28, 64; pile-to-deck connections, 26–28, 26*f*, 26*t*, 28*f*, 58–64, 59*f*, 60*f*, 61*f*, 62*f*, 63*f*
design criteria, 37–38
design method, 6
DMF. *See* dynamic magnification factor
dynamic magnification factor, 5
earth pressures, 10, 48
earthquake ground motions, 9, 43–44
equivalent pile depth to fixity, 9, 11, 15
fault rupture, 10, 45
geotechnical considerations: axial pile performance, 47–48; cyclic degradation potential, 44; earth pressures, 48; earthquake ground motions, 43–44; fault rupture, 45; lateral ground deformation, 44–45, 45*f*; lateral loading, 46–47; lateral loadings, 45–46; liquefaction, 44; settlement, 47; slope stability, 44–45, 45*f*; soil-pile behavior, 46–47; soil-structure interaction, 45–46
ground motions, 9
inelastic material properties, 16–18, 17*t*, 53
joint detailing, 29–31, 29*f*, 30*f*, 64, 66–67, 66*f*, 67*f*
joint shear, 28–29, 64, 64*f*, 65*f*
lateral ground deformation, 9–10, 44–45, 45*f*
lateral loading, 46–47
lateral loadings, 45–46
liquefaction, 9, 44
load combinations, 6
loading, lateral, 10, 45–46
marine loading arm, 72*f*
modeling: displacement-based design, 18–19, 18*f*, 19*t*, 53–54, 54*f*; force-based design, 12, 12*t*, 51
modeling considerations, 6–7
performance levels, 3, 3*t*, 38–39, 38*f*
piers: defined, 1; overview, 35–36
piles: axial pile performance, 10, 47–48; batter, 41–42, 42*f*; design considerations, 28, 64; equivalent pile depth to fixity, 9, 11, 15; pile-to-deck connections, 26–28, 26*f*, 26*t*, 28*f*, 58–64, 59*f*, 60*f*, 61*f*, 62*f*, 63*f*; soil-pile behavior, 10, 46–47
pile-to-deck connections, 26–28, 26*f*, 26*t*, 28*f*, 58–64, 59*f*, 60*f*, 61*f*, 62*f*, 63*f*
seismic design tasks, 5–6
seismic hazards, 39
seismic isolation, 8, 8*f*
seismic performance requirements: design classifications, 37; design criteria, 37–38; overview, 37; performance levels, 38–39, 38*f*; seismic hazards, 39
settlement, 10, 47
slope stability, 9–10, 44–45, 45*f*
soil-pile behavior, 10, 46–47
soil-structure interaction, 10, 45–46
strain limits, 7, 7*t*
strain penetration, 5
substitute structure method, 5, 15
wharves: defined, 1; island, 36; L-shaped, 36; marginal, 36; T-shaped, 36; U-shaped, 36